This is a digital copy of a book that was preserved for generations on library shelves before it was carefully scanned by Google as part of a project to make the world's books discoverable online.

It has survived long enough for the copyright to expire and the book to enter the public domain. A public domain book is one that was never subject to copyright or whose legal copyright term has expired. Whether a book is in the public domain may vary country to country. Public domain books are our gateways to the past, representing a wealth of history, culture and knowledge that's often difficult to discover.

Marks, notations and other marginalia present in the original volume will appear in this file - a reminder of this book's long journey from the publisher to a library and finally to you.

Usage guidelines

Google is proud to partner with libraries to digitize public domain materials and make them widely accessible. Public domain books belong to the public and we are merely their custodians. Nevertheless, this work is expensive, so in order to keep providing this resource, we have taken steps to prevent abuse by commercial parties, including placing technical restrictions on automated querying.

We also ask that you:

+ *Make non-commercial use of the files* We designed Google Book Search for use by individuals, and we request that you use these files for personal, non-commercial purposes.

+ *Refrain from automated querying* Do not send automated queries of any sort to Google's system: If you are conducting research on machine translation, optical character recognition or other areas where access to a large amount of text is helpful, please contact us. We encourage the use of public domain materials for these purposes and may be able to help.

+ *Maintain attribution* The Google "watermark" you see on each file is essential for informing people about this project and helping them find additional materials through Google Book Search. Please do not remove it.

+ *Keep it legal* Whatever your use, remember that you are responsible for ensuring that what you are doing is legal. Do not assume that just because we believe a book is in the public domain for users in the United States, that the work is also in the public domain for users in other countries. Whether a book is still in copyright varies from country to country, and we can't offer guidance on whether any specific use of any specific book is allowed. Please do not assume that a book's appearance in Google Book Search means it can be used in any manner anywhere in the world. Copyright infringement liability can be quite severe.

About Google Book Search

Google's mission is to organize the world's information and to make it universally accessible and useful. Google Book Search helps readers discover the world's books while helping authors and publishers reach new audiences. You can search through the full text of this book on the web at `http://books.google.com/`

referred to others for smaller gas engines.

The increase in speed, now so common a eature, actually forms the chief service ren-

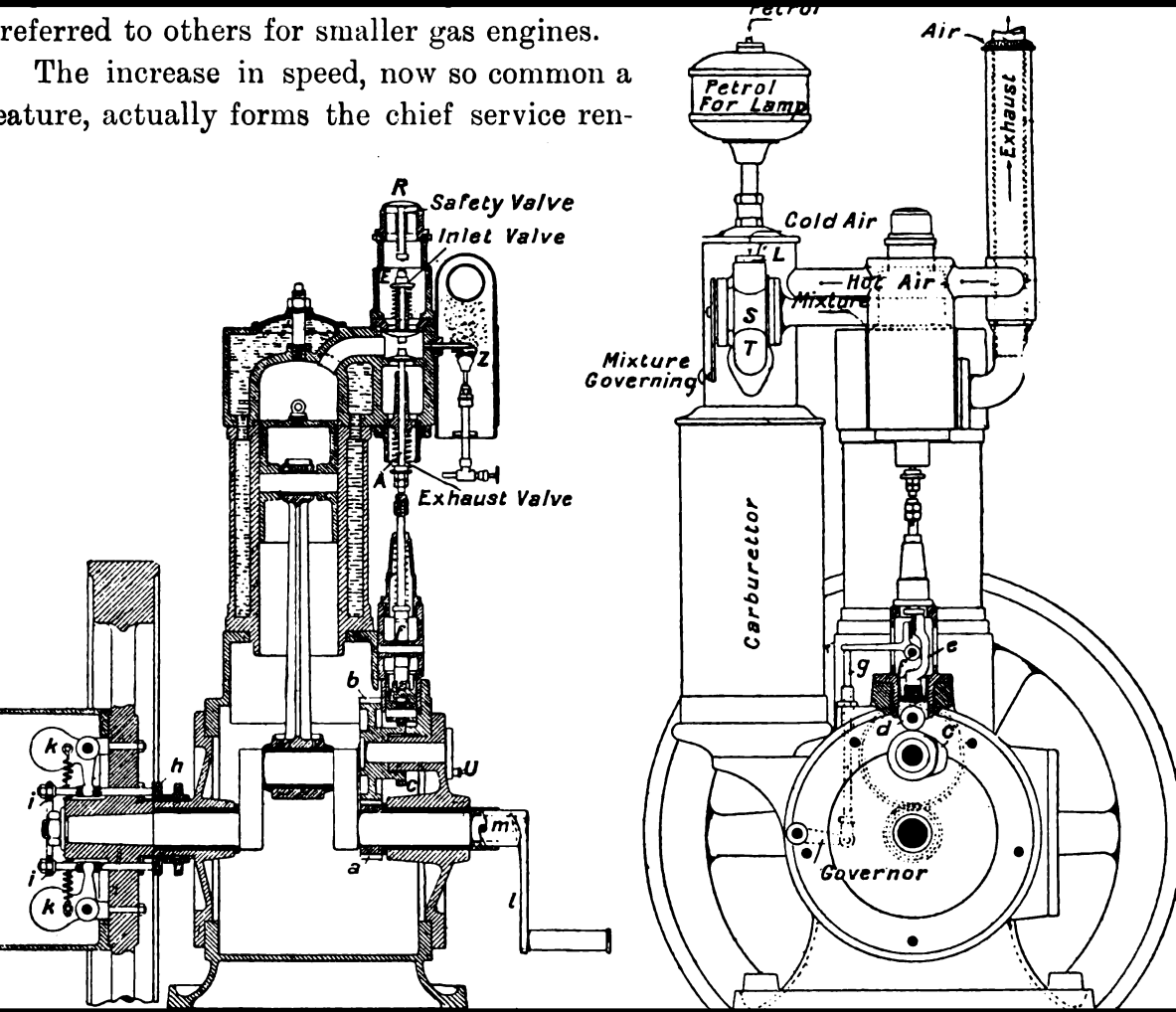

Oil motors

Georg Lieckfeld

Digitized by Google

LIBRARY
OF THE
UNIVERSITY OF CALIFORNIA.

Class

Digitized by Google

Digitized by Google

Digitized by Google

OIL MOTORS.

Digitized by Google

CHARLES GRIFFIN & CO., LTD., PUBLISHERS.

Cloth. Fully Illustrated. $5.00 net.

A MANUAL OF

PETROL MOTORS AND MOTOR CARS.

Comprising the Designing, Construction, and Working of Petrol Motors.

By F. STRICKLAND.

"Thoroughly practical and scientific. . . . We have pleasure in recommending it to all."—*Mechanical Engineer.*

Second Edition. Revised and greatly Enlarged. Cloth. $2.00 net.

THE PETROL CAR.

(MOTOR-CAR MECHANISM AND MANAGEMENT.)

By W. POYNTER ADAMS, M.Inst.C.E.

"Should be carefully studied by all those who have anything to do with motors."—*Automobile and Carriage Builders' Journal.*

Fifth Edition. Thoroughly Revised and greatly Enlarged. $3.00.

VALVES AND VALVE-GEARING.

A Practical Text-book for the use of Engineers, Draughtsmen, and Students.

By CHARLES HURST.

"As a practical treatise on the subject, the book stands without a rival."—*Mechanical World.*

Second Edition. Large 8vo. Handsome Cloth. Illustrated. $6.00 net.

LUBRICATION AND LUBRICANTS:

A Treatise on the Theory and Practice of Lubrication, and on the Nature, Properties, and Testing of Lubricants.

By L. ARCHBUTT, F.I.C., F.C.S., and R. M. DEELEY, M.I.Mech.E., F.G.S.

"All that is known on the subject. . . . Deserves the careful attention of all engineers."—*Railway Official Gazette.*

In Large 8vo. Cloth. Fully Illustrated. $3.50 net.

THE PROBLEM OF FLIGHT.

By HERBERT CHATLEY, B.Sc. (Eng.).

"An epitome of the knowledge available on the subject."—*Scotsman.*

Nineteenth Edition. Leather. Pocket Size.

A POCKET-BOOK OF

ELECTRICAL RULES AND TABLES.

By J. MUNRO, C.E., and Prof. JAMIESON, M.Inst.C.E., F.R.S.E.

"Wonderfully perfect. . . . Worthy of the highest commendation we can give it."—*Electrician.*

Second Edition. In Two Volumes. Revised, Enlarged, with New Bibliography. $13.50 net.

PETROLEUM AND ITS PRODUCTS.

By Sir BOVERTON REDWOOD, D.Sc., F.R.S.E.

"Indisputably the most comprehensive and complete treatise on petroleum."—*Petroleum World.*

Second Edition. Revised. With Illustrations. $3.00 net.

A HANDBOOK ON PETROLEUM.

FOR INSPECTORS UNDER THE PETROLEUM ACTS,

and for those engaged in the Storage, Transport, Distribution, and Industrial Use of Petroleum and its Products, and of Calcium Carbide.

By Capt. J. H. THOMSON and Sir BOVERTON REDWOOD.

"Reliable, indispensable, a brilliant contribution."—*Petroleum.*

London: CHAS. GRIFFIN & CO., LTD., Exeter Street, Strand.

To be had of J. B. LIPPINCOTT COMPANY, Philadelphia.

Digitized by Google

OIL MOTORS:

THEIR DEVELOPMENT, CONSTRUCTION, AND MANAGEMENT.

A HANDBOOK FOR ENGINEERS, OWNERS, ATTENDANTS, AND ALL INTERESTED IN ENGINES USING LIQUID FUEL.

BY

G. LIECKFELD, CIVIL ENGINEER.

SOLE AUTHORISED ENGLISH EDITION.

With 306 Illustrations.

LONDON:
CHARLES GRIFFIN & COMPANY, LIMITED.
PHILADELPHIA: J. B. LIPPINCOTT COMPANY.
1908.

[*All Rights Reserved.*]

Digitized by Google

TJ785
.U5

GENERAL

Digitized by Google

PREFACE.

THE present work is a translation of the third edition of *Die Petroleum- und Benzinmotoren*, which in Germany constitutes a handbook widely read by all persons interested in the construction or the working of stationary and automobile engines using liquid-fuel.

The author, as will be seen, deals exhaustively with the subject: commences with descriptions of the liquid-fuels available, leads up to the construction of the various types of engines, with explanations on their component parts, the functions of the latter, and concludes with very complete notes on the troubles which may occur with even the best regulated engines, the causes of such troubles, and the various means of rectifying them.

In the same way as wonders have been wrought with the electric current, it being impossible to define what electricity exactly is, a great deal has been accomplished with liquid fuel, petrol especially, an essence of crude mineral oil—petroleum—of which it is very difficult to say more than that it is the result of a very complete natural distillation of some original substance or substances, carried out during a very lengthy period.

The adjective "mineral" in a preface to the present book forms more or less of a misnomer, for the author is of the opinion that petroleum is the result of a natural distillation of animal matter. This, as is well known, is a much disputed point, and there are many experts who entertain the theory that petroleum is a result of the decomposition of vegetable remains, while others, quite as numerous, believe it to be due to the natural reaction of gases upon minerals, the process in the latter case being, if we may so term it, a volcanic one. The formation of a definite opinion on this point is further complicated by the fact that the chemical composition of petroleum from various sources shows many distinctive characteristics. The author is therefore quite justified in putting forward his theory: it has as many points in its favour as the two others.

It should be remarked here that the Continental appellations for oil fuels do not correspond in every case to those in use in this country—petrol, on the Continent, meaning very generally the refined oil and not the distillate. Continental firms often add to the word "petrol" the qualificative "oil" or "essence," which serves as a rough guide when the specific gravity is not stated.

In the names given to the derivatives of both petroleum and tar, there is also a lack of consistency between the practice of different countries in

203812

Digitized by Google

clearly discriminating between paraffin, refined petroleum oil, and crude oil. In the present translation, most of the terms used are those employed, for instance, in the Report of the Fuels Committee of the Motor Union of Great Britain and Ireland, the hope being entertained that by adopting recognised standards their meaning will be correctly interpreted.

Whatever may be the origin of crude petroleum, its supply is far from being inexhaustible; progress in the matter of internal combustion engines will lie in increasing the amount of power to be obtained from a given quantity of liquid-fuel. But it will lie more especially in the greater adaptation of these engines to the use of alcohol, and the author is right in surmising that the agriculture of the future will be devoted to the growing, in constantly increasing proportions, of plants and fruits from which concentrated fuels may be obtained.

LONDON, *October* 1908.

Digitized by Google

CONTENTS.

CHAPTER I.

THE ORIGIN AND EXTRACTION OF LIQUID-FUELS.

PAGES

Crude petroleum and its distillates—The liquid distillates of mineral coal—Alcohol 1–8

CHAPTER II.

LIQUID-FUELS AS A MEANS OF POWER PRODUCTION.

Petrol—Paraffin oil or kerosene—Benzol—Alcohol. 9–17

CHAPTER III.

THE DEVELOPMENT OF THE PETROL AND PARAFFIN MOTORS.

The Hock petrol engine—Brayton petrol engine—Wittig & Hees petrol engine—Daimler petrol engine—Development of the paraffin and oil engine—The Kjelsberg paraffin engine of 1889—Capitaine paraffin engine—Paraffin engine on the Hornsby-Akroyd system—First Diesel engines 18–37

CHAPTER IV.

THE WORKING OF THE LATER PARAFFIN AND PETROL ENGINES: THEIR CONSTRUCTION AND COMPONENT PARTS.

The working of paraffin and petrol engines—The construction of paraffin and petrol engines—Component parts of paraffin and petrol engines—The supply and mixture of the fuel—Carburettors for light fuels—Carburettors for heavy fuels—Fuel pumps—Fuel filters—Heating lamps for oil and petrol engines—Speed governors—Starting devices—Cylinder lubrication—Cylinder lubricating apparatus 38–75

CHAPTER V.

IGNITION DEVICES FOR OIL AND PETROL ENGINES.

GENERAL REMARKS.

Hot tube ignition—Electric ignition—Illustrations of the various devices. . 76–91

Digitized by Google

CHAPTER VI.

Examples of Stationary Petrol and Alcohol Engines.

PAGES

Körting, Deutz, Swiderski, Oberursel, Gardner, Tangye, Söhnlein, and Bánki Engines 92–125

CHAPTER VII.

Recent Stationary Engines Working with Paraffin and Crude Oil.

Bánki, Diesel, Trinkler, and Bronsmotorenfabrik engines 126–136

CHAPTER VIII.

Automobile Engines.

Benz, de Dion Bouton, Canello-Dürkopp, Adlerwerke, Daimler, "Hexe," "Bayard," Swiderski, and Nürnberger-Motorfahzeugfabrik, "Union," automobile engines—Recent cycle engines, Neckarsulmer cycle engine, "Motosacoche," and Wanderer-Fahrradwerke cycle engines 137–162

CHAPTER IX.

Ship, Boat, and Airship Engines.

Daimler boat engine, Swiderski paraffin boat engine, "Sleipner" boat engine, Körting paraffin engine for submarine boats, Deutz boat engine, Gardner paraffin boat engine, Heinrich Kämper boat engines, and Thornycroft boat engines—German airship engines, and "Antoinette," Paris, sixteen cylinder engine 163–179

CHAPTER X.

Road and Rail Vehicles, and Airships, Driven by Internal Combustion Engines.

First Daimler motor cycle—First Daimler car—Recent automobiles—Benz first motor car—Benz automobile—Chassis of six-cylinder "Hexe" automobile—Daimler chassis—"Mercédès Simplex" car—Daimler omnibus—Daimler military transport car—Daimler lorry—"Bayard" automobile and chassis—"Maurer-Union" automobiles—"Cyklonette" delivery and passenger cars—Motor tricycles and bicycles—Troost tractor—Rail vehicles driven by internal combustion engines—First rail vehicle—Daimler "summer car," 1887—Daimler motor-driven trolley and railway carriage—Recent Deutz and Oberursel locomotives—Motor boats—Daimler motor boats and friction gear—Grob & Meissner boats and reversible propellers—Bieberstein and Gödicke and Kämper transmission gear—Cudell motor-driven propeller—Airship engines—Thornycroft racing motor boat—Diesel engines on passenger and cargo steamer, and on a Russian gunboat—Zeppelin and "Ville de Paris" dirigible airships—Portable engines—Deutz, Oberursel, Bieberstein, Tangyes, Ganz, and Swiderski locomobiles—Motor-driven water- and air-pumps by Körting, Swiderski, Deutz, and Tangye—Oberursel motor-driven winch—Daimler fire engine—Oberursel engine-driven crane—Ganz engine-driven plough—Dynamo car—Engine-driven dynamo—Engine-driven traverser—Engine-driven wood sawing and cutting machine 180–236

Digitized by Google

CHAPTER XI.

Erection and Attendance of Engines Driven with Liquid-Fuel.

PAGES

Points to be taken into account—Foundations—Location for good transmission—Transport of heavy parts—Accessibility of the engine—Exhaust pipe—Air-supply pipes—Cooling—Illustrations of complete plants—Conditions in force from 1st August 1906, in Germany, relating to the installation of stationary engines using liquid fuels 237–253

CHAPTER XII.

On Correcting Irregularities in Running.

Dangers, and precautions to be taken, in connection with the use of internal combustion engines—Details of troubles which may occur, the causes of such troubles, their explanation and remedies—Dangers and precautions with internal combustion engines 254–266

INDEX 267–272

Digitized by Google

LIST OF ILLUSTRATIONS.

FIG.		PAGE
1.	Hock petrol motor, A.D. 1873	19
2.	Brayton petrol engine, A.D. 1876 (longitudinal section)	21
3.	,, ,, ,, (plan).	22
4, 5.	Wittig & Hees petrol engine	23
6.	,, ,, ,,	24
7, 8.	The Daimler petrol engine	25
9.	The Daimler carburettor	26
10, 11.	Kjelsberg paraffin engine	28
12, 13.	The Capitaine paraffin engine	30
14.	Carburettor of the Capitaine paraffin engine	31
15.	Governor of the Capitaine paraffin engine	31
16.	Paraffin engine, Akroyd system	33
17.	Paraffin pump of the Akroyd engine	34
18.	First Diesel experimental engine, built in 1894 by the Maschinenfabrik, Augsburg	35
19.	Second Diesel experimental engine, built in 1897 by the Maschinenfabrik, Augsburg	36
20.	Horizontal type of engine with crosshead guide	40
21.	Horizontal trunk-piston type	40
22.	Vertical type with crankshaft below	40
23.	,, ,, ,, above	40
24.	Inclined type with crankshaft below	40
25, 26.	Horizontal engine frame, with cylinder liner	41
27.	Vertical engine frame, with cylinder liner	42
28.	Piston with movable gudgeon	44
29.	Piston with fixed gudgeon	44
30.	Piston ring stud of the Gasmotorenfabrik Deutz	45
31.	Tangyes piston ring stud	45
32.	Piston ring stud of the Verdau Motorenfabrik	45
33.	Valve	46
34.	Körting's carburettor for stationary engines	50
35.	Bánki carburettor	50
36–38.	Carburettor of the Daimler Motoren-Gesellschaft, Untertürkheim	51
39.	Automatic carburettor for automobiles of the Adler-Fahrradwerke, formerly Heinrich Kleyer, Frankfort-on-Main	52
40.	Longuemare carburettor for stationary and automobile engines	53
41.	Carburettor by A. Clément, Levallois-Perret, Paris ("Bayard" automobiles)	53
42, 43.	Longuemare carburettor: latest type for automobiles	54
44.	Carburettor for the Neckarsulmer Fahrradwerke A.-G. motor cycle	54
45.	The Capitaine carburettor for fuel having a high boiling-point	56
46, 47.	The Bánki carburettor for oil and petrol engines	57

Digitized by Google

FIG. PAGE
48. Longuemare carburettor for heavy fuel 57
49. Oil pump of the Swiderski oil engine 58
50. The Grob & Co. valveless oil pump 59
51, 52. Diesel engine fuel pump 59
53. The Körting wire gauze filter 60
54. The Longuemare wire gauze filter 60
55. The Longuemare filter for automobiles 60
56, 57. Pressure-producing devices for heating lamps, used by the Daimler-Motorengesellschaft 62
58–60. The Capitaine oil-heating lamp 63
61. Swedish oil-heating lamp 64
62. The Fried. Krupp, Grusonwerke, inertia governor 67
63. Körting's flywheel governor 68
64. Centrifugal governor of the Daimler-Motorengesellschaft . . . 68
65. Centrifugal governor of the Adler-Fahrradwerke 68
66, 66A. Fischer safety crank 70
67. Lubricator of the Gasmotorenfabrik Deutz 74
68. Körting's cylinder lubricator 74
69. Gasmotorenfabrik Deutz pressure pump 74
70. Lubricating pump of Blanke & Rast, Leipzig-Plagwitz 74
71. Blanke & Rast oil distributor for pressure lubrication 74
72. Oil cleaning apparatus, with salt filters, by Blanke & Rast, Leipzig-Plagwitz (German patent) 75
73. Ignition tube, Daimler's patent 77
74–76. Sections of porcelain ignition tubes 78
77. Electric ignition device 79
78. ,, ,, ... 81
79. Magneto-electric ignition for stationary engines, by Robert Bosch, Stuttgart . 82
80. Ignition mounting 83
81. Magneto-electric ignition apparatus, with rotary armature, for automobile engines 84
82, 83. Magneto-electric ignition apparatus, with rocking armature shield, and different types of springs for stationary engines 84
84. Sparking plug of the Neckarsulmer Fahrradwerke 85
85, 86. Contact breaker of the Neckarsulmer Fahrradwerke 86
87, 88. Bosch high-tension ignition apparatus for three-, four-, and six-cylinder automobile engines 87
89. Diagram of connections of a high-tension ignition apparatus for a four-cylinder engine 88
90. Plug for Bosch high-tension ignition 88
91. Adjustable contact-breaking device, by Robert Bosch, for a four-cylinder automobile engine 89
92. Bosch ignition apparatus, with rotary armature, for high-speed engines with contact-breaking device 89
93–95. Bosch magneto-ignition plug (Honold system) 90
96, 97. Cable-eye of the Apparatenbauanstalt Fischer, Frankfort 91
98. Körting's liquid-fuel engine 93
99. ,, ,, (plan) 94
100. ,, ,, (section) 95
101. ,, ,, (ignition) 95
102. ,, ,, (general view) 96
103. Deutz slow-speed liquid-fuel engine in which the mixture is formed by means of a pump and an atomiser (side elevation) 98

Digitized by Google

FIG.		PAGE
104.	Deutz liquid-fuel engine (Section I., II. of fig. 103)	99
105.	,, ,, (section through valves in engines with pump and atomiser)	99
106.	Deutz liquid-fuel engine, using a vaporiser (longitudinal section)	100
107.	,, ,, fitted with evaporation cooling jacket (section)	100
108.	,, ,, (details of ignition)	101
109.	,, ,, with vaporiser	101
110.	,, ,, (vertical section)	103
111.	,, ,, (side elevation)	104
112.	Swiderski liquid-fuel engine (side elevation)	106
113.	,, ,, (vertical section)	107
114.	,, ,, (general view)	108
115.	Oberursel engine (section through base plate)	109
116.	Oberursel liquid-fuel engine (side elevation)	110
117.	,, ,, ,, (vertical section)	111
118.	,, ,, ,, (general view)	112
119.	Stationary liquid-fuel engine, built by the Motorenfabrik Oberursel A.-G.	114
120.	Gardner liquid-fuel engine, type 3 to 5	115
121.	,, ,, type 1 to 2A	116
122.	Vertical section of Tangye engine	118
123.	Horizontal section of Tangye engine	118
124.	Cross section of Tangye engine	119
125.	Feed pump for starting with petrol	119
126.	Electric ignition	119
127.	Tangye liquid-fuel engine, for small powers	119
128.	,, ,, for large powers	120
129.	Tangye alcohol engine	120
130.	Söhnlein two-stroke cycle, valveless engine	121
131.	,, ,, ,, ,,	122
132.	Bánki petrol engine (vertical section)	124
133.	,, ,, (side elevation)	125
134.	Bánki oil engine (vertical section)	127
135.	,, ,, (section through valve chest and exhaust)	127
136, 137.	Sections through cylinder and valve chest of Diesel oil engine	128
138, 139.	Diesel engine pump, for second stage of air compression, for supplying the air for spraying the fuel	129
140, 141.	Details of a Diesel engine	130
142.	120 h.-p. Diesel engine built by the Maschinenfabrik Augsburg (front view)	131
143.	,, ,, ,, ,, (rear view)	132
144.	Trinkler engine, built by the Gebr. Körting Co., Hanover (longitudinal section)	134
145.	,, ,, ,, ,, ,, (section through valve)	135
146.	,, ,, ,, ,, ,,	135
147.	Paraffin and crude oil engine built by the Bronsmotorenfabrik, Appingedamm (Holland)	136
148.	Benz automobile engine of 1896 (horizontal section)	139
149.	,, ,, ,, (side view)	140
150.	De Dion-Bouton engine in its original form (vertical section)	141
151.	,, ,, (side elevation)	141
152, 153.	Canello-Dürkopp automobile engine	142
154.	Four-cylinder engine of the Adlerwerke, vorm. Heinrich Kleyer A.-G. Frankfort-Main (front view)	143
155.	Four-cylinder engine of the Adlerwerke, vorm. Heinrich Kleyer A.-G. Frankfort-Main (vertical section)	144

Digitized by Google

FIG.		PAGE
156.	Four-cylinder engine of the Alderwerke, vorm. Heinrich Kleyer, A.-G., Frankfort-Main (view of combined casing for engine and gear)	145
157.	Four-cylinder engine of the Daimler-Motorengesellschaft (exhaust side)	146
158.	Four-cylinder engine of the Daimler-Motorengesellschaft (inlet side)	147
159.	,, ,, ,, ,, (front view)	148
160.	Six-cylinder "Hexe" engine built by Achenbach & Co., Hamburg (side elevation)	149
161, 162.	Front view and vertical section of the six-cylinder "Hexe" engine, built by Achenbach & Co., Hamburg	150
163.	Crank shaft of the six-cylinder "Hexe" engine, built by Achenbach & Co., Hamburg	151
164.	Four-cylinder "Bayard" engine (side view)	151
165.	,, ,, ,, (front view)	152
166.	"Bayard" engine (vertical section)	152
167.	"Bayard" engine (Simms-Bosch ignition device)	152
168.	Paraffin engine for heavy cars, 70 h.-p., built by the Maschinenbau A.-G. vorm. Ph. Swiderski for Messrs E. Troost, Berlin, Hamburg, and South-West Africa	153
169.	Four-cylinder "Maurer-Union" engine (side view)	154
170.	One-cylinder "Maurer-Union" engine (section in cylinder)	155
171.	,, ,, ,, (side view)	155
172.	Neckarsulmer cycle engine	156
173.	Carburettor of "La Motosacoche"	157
174.	Vertical section of cycle engine built by H. & A. Dufaux & Co., Geneva	158
175.	Cross-section of cycle engine built by H. & A. Dufaux & Co., Geneva	159
176.	General view of the engine complete (left side)	160
177.	,, ,, ,, (right side)	160
178.	Cycle engine of the Wanderer-Fahrradwerke	161
179.	Engine of the Maschinenfabrik "Cyklon"	162
180, 181.	Daimler boat engines built in 1890	164
182.	Swiderski boat engine (vertical section)	165
183.	,, ,, (side elevation)	165
184.	"Sleipner" boat engine (section through cylinder)	166
185.	,, ,, ,, (general arrangement)	167
186.	The Körting six-cylinder submarine boat engine using paraffin	168
187.	Section through the engine-room of a submarine fitted with the Körting paraffin engine	169
188.	Deutz boat engine driven with paraffin	170
189.	Gardner one-cylinder boat engine, using paraffin	171
190.	Gardner two-cylinder boat engine, using paraffin (longitudinal section)	172
191.	,, ,, ,, (cross section)	173
192.	The Kämper one-cylinder boat engine	174
193.	The Kämper three-cylinder boat engine	174
194.	Thornycroft boat engine	175
195, 196.	,, ,,	176
197.	,, ,,	177
198.	Körting airship engine of 1887	177
199.	100 h.-p. "Antoinette" engine carried by a man	178
200.	Sixteen-cylinder 100 h.-p. engine, built by the Société "Antoinette"	179
201.	The first Daimler motor cycle	181
202.	,, ,, (side elevation)	181
203.	The first Daimler car, 1886 (general view)	182
204.	,, ,, (side elevation)	182

Digitized by Google

FIG.		PAGE
205.	The Benz first motor car, 1886 (general view)	183
206.	,, ,, (rear view)	184
207.	View of Benz automobile of 1891, seating three or four persons	185
208.	Benz automobile of 1891 (side elevation)	186
209.	,, ,, (plan)	186
210, 211.	Chassis of the six-cylinder automobile "Hexe" type, built by Achenbach & Co., Hamburg	187
212.	View of the six-cylinder "Hexe" automobile, 35/40 h.-p.	189
213.	Chassis and gear of the Daimler-Motorengesellschaft Untertürkheim	190
214.	View of an 18 h.-p. motor car "Mercédès Simplex," built by the Daimler-Motorengesellschaft	191
215.	12 h.-p. motor omnibus, built by the Daimler-Motorengesellschaft	192
216.	10 h.-p. military transport car, built by the Daimler-Motorengesellschaft	193
217.	16 h.-p. lorry, built by the Daimler-Motorengesellschaft	194
218.	Chassis of a "Bayard" 14/18 h.-p. automobile	195
219.	View of a 10/14 h.-p. "Bayard" automobile	195
220.	View of a 14/18 h.-p. "Bayard" automobile	195
221.	Chassis and gear of a four-cylinder "Maurer Union" automobile	196
222.	6 to 8 h.-p. "Maurer Union" automobile for doctors' use	196
223.	12 to 22 h.-p. four-cylinder "Maurer-Union" automobile	196
224.	"Cyklonette" delivery car, built by the Maschinenfabrik "Cyklon," Rummelsburg	197
225.	"Cyklonette" with hood, seating two or three persons	197
226.	Neckarsulmer motor tricycle with detachable side seat	198
227.	2½ h.-p. motor cycle of the Wanderer Fahrradwerke	199
228.	Bicycle fitted with a 1¼ h.-p. "Motosacoche" engine	200
229.	Troost tractor	200
230.	,,	201
231.	First rail vehicle driven by a petrol engine, built in 1880	202
232.	The Daimler "summer" car, 1887	202
233.	The Daimler motor-driven trolley	203
234.	The Daimler motor-driven railway carriage	203
235.	Field and forest track locomotive, equipped with a 32 h.-p. engine, built by the Gasmotorenfabrik Deutz	205
236.	Shunting locomotive, equipped with a 60 h.-p. engine, built by the Gasmotorenfabrik Deutz	206
237.	Mining locomotive, equipped with a 32 h.-p. engine, built by the Gasmotorenfabrik Deutz	206
238.	Shunting locomotive, equipped with an alcohol-petrol engine, built by the Motorenfabrik Oberursel	207
239.	Mining locomotive in service at the Bergbau Aktiengesellschaft, Friedrichssegen, Lahn	207
240.	The first Daimler motor boat built in 1886	208
241.	Arrangement of a Daimler boat built in America in 1890	208
242.	The Daimler friction gear for motor boats	209
243, 244.	Reversible propeller manufactured by the Motorenfabrik Grob & Co., Leipzig	209
245.	Device for reversing propeller blades in motor boats	210
246.	Reversible propeller manufactured by Karl Meissner, Hamburg, for large boats	211
247.	Transmission gear for ship propellers built by Bieberstein & Gödicke, Hamburg	211
248.	Transmission gear for ship propellers, built by Heinrich Kämper, Berlin-Mariendorf	212

Digitized by Google

FIG. PAGE
249. 2·5 h.-p. motor-driven propeller for small boats and yachts, built by the Cudell-Motoren-Gesellschaft, Ltd., Berlin, N. 212
250. 2 h.-p. motor-driven propeller, built by the Cudell-Motoren-Gesellschaft, Ltd., Berlin, N. 213
251. Boat equipped with the Cudell propelling device 213
252–254. Motor boats built by Karl Meissner, Hamburg 214
255. Longitudinal section of a Karl Meissner motor boat 214
256. View of a Karl Meissner motor boat 215
257. Racing motor boat, built by Messrs John J. Thornycroft & Co., London . 215
258. Motor boat built by Messrs Bieberstein & Gödicke, Hamburg 216
259, 260. ,, ,, ,, ... 217
261, 262. Russian gunboat with Diesel engines and electric transmission to the propeller shaft 218
263. Dirigible airship of Count von Zeppelin (rigid system) 219
264. Dirigible airship "La Ville de Paris" (semi-rigid system) . . . 219
265. Locomobile with belt transmission, built by the Gasmotorenfabrik Deutz . 220
266. Locomobile with transmission gear, built by the Motorenfabrik "Oberursel" . 221
267. 2 to 6 h.-p. locomotive, built by the Motorenfabrik "Oberursel" . . 221
268. Locomobile built by Bieberstein & Gödicke, Hamburg 222
269. Locomobile built by the Motorenfabrik "Oberursel" 223
270. Locomobile built by Tangyes, Ltd., Birmingham 223
271. Locomobile built by Ganz & Co., Budapest 224
272. Locomobile built by the Maschinenbau A.-G., vorm. Ph. Swiderski, Leipzig . 225
273. Engine-driven waterwork installation, built by the Gebr. Körting Co., Körtingsdorf-Hanover 225
274. The Swiderski engine-driven pump 226
275, 276. Körting engine-driven pumps 227
277, 278. Engine-driven pumps, built by the Gasmotorenfabrik Deutz . . 227
279, 280. Pumps built by the Gasmotorenfabrik Deutz 228
281, 282. Pumps built by Tangyes, Ltd., Birmingham 229
283, 284. Air-compressors built by the Gasmotorenfabrik Deutz . . . 230
285. Winding winch for use on building construction, by the Motorenfabrik "Oberursel" 231
286. Engine-driven fire-engine, built by the Daimler-Motorengesellschaft, Untertürkheim 231
287. Engine-driven crane, by the Motorenfabrik "Oberursel" . . . 232
288. Engine-driven plough, by Ganz & Co., Budapest 232
289. Dynamo car, motor-driven, by Bieberstein & Gödicke, Hamburg . . 233
290. Dynamo with three-cylinder engine, by Bieberstein & Gödicke, Hamburg . 234
291. Engine-driven traverser, by Gebr. Körting, Körtingsdorf, near Hanover . 235
292. Engine-driven wood-sawing and cutting machine, built by Grob & Co., Leipzig . 236
293. Cooling with water under pressure and exhaust pipe for a small vertical engine . 240
294. Arrangement of cooling tank with a 2 h.-p. engine 240
295. The Körting radiator 241
296. Radiator with device for heating or ventilating 241
297. Air cooler 242
298. Installation consisting of a small engine, using petrol, benzol, or paraffin . 243
299. Engine installation for agricultural purposes 243
300, 301. Engine installation for agricultural purposes 244
302, 303. Mechanically worked dairy and agricultural installation . . . 245
304, 305. Mechanically worked dairy and agricultural installation . . . 246
306. Roll-mill driven by a 3 h.-p. engine 246

Digitized by Google

Digitized by Google

LIBRARY OF THE UNIVERSITY OF CALIFORNIA

OIL MOTORS.

CHAPTER I.

THE ORIGIN AND EXTRACTION OF LIQUID FUELS.

(a) Crude Petroleum and its Distillates.

CRUDE petroleum, which has been known from very remote times by the names of rock oil, mineral oil, or naphtha, is found in many parts of the world. In some places it wells forth naturally at the surface, but more generally it can only be obtained by employing some such means as boring. It is an oily liquid, having a disagreeable and penetrating odour. It is dark-yellow, brown, or grey in colour, according to the district whence it is obtained, and it has, in addition to its colour, a characteristic blue or greenish fluorescence.

The largest quantities of crude petroleum are procured from fields in North America (*e.g.* the Pennsylvanian and Canadian fields, etc.) and in Russia, where large fields exist in the provinces bordering on the Caspian Sea. Several other sources of supply are known and worked, as, for instance, in Galicia, Roumania, and in the provinces of Hanover and Elsass (Pechelbronn), in Germany, but these are of less importance.

In 1879–1880 it was thought that oil-fields, as large and important as any existing in America or Russia, had been discovered in the small town of Peine, about eighteen miles to the east of Hanover. Several wells, giving each a large output, were tapped within a very short time of each other, but they rapidly became exhausted, and the bright prospects of large profits vanished. The discovery, a few years ago, of petroleum near the small river Wietze, put new life into the Hanoverian oil industry; and although, in this instance, the supply appears to be of a more lasting nature than that worked in Peine, this field in no way compares with those in America or Russia. It should be noticed in this connection also, that the Hanover petroleum district does not consist of one extensive basin. The formation contains faults which result in the supply being cut up, and to this fact will be due its exhaustion, at a more or less rapid rate, according to circumstances.

Digitized by Google

Petroleum was formerly considered to be the product of a process of dry distillation, under pressure, of vegetable matter. Later researches, however, suggest that its origin is to be traced to the animal kingdom, and that it really results from a distillation of animal matter.

Experiments have shown that by the distillation, under great pressure, of animal fats, a product is obtained which is similar in all respects to crude petroleum. It may now also be taken as proven that petroleum is not one variety or example of a large class, but that it is the original matter from which all bituminous substances are derived. Mineral tar, ozokerite, asphalt, and other similar natural products, known as bituminous substances, have, without doubt, been formed from petroleum, partly by the evaporation of volatile components and their combination with the oxygen of the air. This is shown to be the case by the existence of mineral tar in close proximity to the petroleum fields in Russia, of ozokerite in Galicia, and of asphalt in the province of Hanover.

It may seem extraordinary that local accumulations of animal remains should have occurred in sufficient quantities to form oil-fields of such extent and productiveness as are now known to exist, but this can, as a matter of fact, easily be explained. It should be remembered that salt-beds are always encountered in proximity to petroleum fields. This fact points to the presence of former salt-water basins, and one may therefore conclude, with little fear of error, that the animal life of these salt-water basins has served to form the local petroleum deposits. Owing to the gradual recession of these seas, and to the formation of bars, the living creatures in these waters would, it is natural to suppose, be cut off from other seas and larger basins, and they probably perished in large quantities.

As already mentioned, crude petroleum has been known from a very early period. It is referred to in the Bible. It has been known in Germany for centuries, and in the neighbourhood of the township of Peine, there is still prevalent an old custom of digging holes out in the open fields in order to obtain oil, which collects in the form of a thick liquid, and is used by the people of the neighbourhood for lubricating their carts, greasing shoes, etc.

The rise of the petroleum industry is, however, of comparatively recent date. The first tube-well was sunk in 1859, at Titusville, Pennsylvania, and this was the first application of what proved to be the correct method of obtaining crude oil in large quantities. When, subsequently, the process of distilling the crude oil and of removing its extremely unpleasant odour had been introduced and perfected, the petroleum industry could truly be said to have been founded. The rapidity with which the use of American refined petroleum became general all over the world, for lighting purposes, was quite phenomenal. It is probably no exaggeration to say that the refined petroleum lamp was in use in every village throughout the whole world in less than ten years from the time of the first successful boring operations conducted in the development of oil-fields.

Digitized by Google

In composition, crude petroleum is a hydrocarbon mixture of liquid gaseous, and solid components, in varying proportions. Its specific gravity is between 0·75 and 0·95, the heavier kinds being the darker in colour.

In its crude state, petroleum is used only as a fuel and for medicinal purposes. Its use as fuel is economical only when its cost is not increased by transport charges. Thus, for instance, it is employed on the steamships trading in the Caspian Sea, and on the Volga.

It is also used on the locomotives of the railways in these same regions, all of which are fired with oil fuel. In some cases, firing with light and porous mineral fuel, such as brown coal and peat impregnated with crude petroleum, has been carried out with a considerable degree of success.

Crude petroleum has long been used for medicinal purposes, after purification by treatment with neutral soaps (alkalis). These preparations are used as salves or ointments. They are known as naphtha salves, and are recommended in certain quarters for their healing properties, for wounds, and as a cure for rheumatic affections.

When heated, crude petroleum gives off condensable vapours in such quantities, that a very considerable reduction of volume of the oil occurs. It is to the distillates thus produced that the great importance of petroleum, for domestic, trade, and industrial purposes, is due.

These distillates may be classified, according to the temperatures at which they are driven off, under three main headings, as follows:—

1. The highly volatile substances given off at temperatures up to 150° C. (302° Fahr.).
2. The less volatile bodies driven off at temperatures between 150° and 270° C. (302° and 518° Fahr.), which includes the paraffin and kerosene used for lighting and power purposes.
3. Those driven off at temperatures over 270° C. (518° Fahr.), which form the mineral lubricating oils.

The yield of distillates of these three classes varies within very wide limits, according to the source whence the crude oil comes.

American crude oil produces the greatest amount of paraffins (*i.e.* distillates of class 2), while the Russian oils yield more of the mineral lubricating oil (distillates of class 3).

The products of the distillation of petroleum are utilised in a great variety of ways. Each product falling within one or other of the classes cited above is further treated in turn, and at definite temperatures it yields a large number of other distillates to which distinctive trade-names are given. As an example of the variety of brands of distillates produced, those manufactured by one firm alone, the Petroleum Refining Co. (formerly Messrs August Korff, Bremen), at temperatures up to 150° C. (302° Fahr.), are given in the accompanying table:—

Digitized by Google

PRODUCTS OF THE BENZINE MANUFACTURING DEPARTMENT.

Products.	Specific Gravity.
Rhigolene	about 0·615—0·625
Petroleum-ether	,, 0·630—0·640
Gasolene No. 0	,, 0·640—0·650
Hydrirene (registered trade-name for gas production)	,, 0·650
Gasolene No. I.	,, 0·650—0·660
,, No. II. (for cooking and heating purposes)	,, 0·670—0·680
Petrol for automobiles and motor cycles (veloyene, registered trade-name)	,, 0·670—0·680
Korff's motor petrol specially suitable for stationary engines	,, 0·670—0·680
Korff's petrol No. I. "Stain-water"	,, 0·690—0·700
,, ,, No. II. For lighting, for domestic purposes, and for cleaning	
Korff's petrol No. III. for lighting and for cleaning purposes	,, 0·710—0·730
Oil of turpentine substitute (putzöl)	,, 0·730—0·750

Distillates coming under Class I. of our grouping, and the uses to which some of them are put, are as follows:—Petroleum-ether, which is obtained at temperatures between 40° and 50° C. (104° and 122° Fahr.), is used as a solvent for indiarubber and various rosins. The gasolene obtained at temperatures between 70° and 80° C. (158° and 176° Fahr.), with a specific gravity of 0·66, is used for removing oils and greases, and for the production of air gas (aerogengas, homogengas, etc.). Petrol is given off at between 80° and 100° C. (176° and 212° Fahr.); it has a specific gravity of 0·68 to 0·7, and its utilisation for power production is dealt with in detail in the following chapters. At temperatures varying from 100° to 170° C. (212° to 338° Fahr.), a substitute for oil of turpentine, "putzöl," is obtained; this has a specific gravity of 0·73 to 0·75; this may also be used for power purposes.

The second group of substances, which are obtained at temperatures ranging from 170° to 270° C. (338° to 518° Fahr.), are employed for lighting purposes. Ten years ago, different grades were not obtainable in this group; at the present time, however, illuminating oils of various qualities are produced. Among these are, for example, "kaiseröl," having a specific gravity of 0·78 to 0·8; American lighting oil (kerosene), of specific gravity 0·8 to 0·81; Russian lighting oil, with a specific gravity of 0·82 to 0·825; and the so-called "engine oil," used with the Diesel, Hornsby, and other engines.

The third group consists of the heavier mineral oils used for lubrication; their specific gravities range from 0·895 to 0·960. They are most extensively used for lubricating, and have almost entirely displaced the vegetable and animal oils and greases in general use thirty years ago.

All substances in the first group evaporate more or less readily at the atmospheric temperature, and the vapours they produce form, when mixed with air, highly explosive mixtures. It is this property which makes these volatile mineral oils of such immense value for the production of power; but these very qualities also entail risk of disastrous explosions, and of fire during transit and warehousing. With the second group—the lighting oils—

Digitized by Google

the danger is much less, especially when distillation has been carried on with care, as is now generally the case. A lighted match thrown upon the surface of good lighting or engine-oil, should not set the oil alight, but should be extinguished as though it fell on water. Inflammable vapours must only be formed on heating to over 30° C. (86° Fahr.). At the present time there are on the market few well-distilled mineral oils used for lighting purposes, which contain in solution any appreciable quantity of hydrocarbon so volatile as to be driven off by variations in the temperature of the atmosphere, and which would, with the air, form explosive mixtures easily ignited.

(b) The Liquid Distillates of Mineral Coal.

(Common Coal and Brown Coal.)

The liquid hydrocarbon mixture (tar) now obtained by the distillation of mineral coal is also used for driving engines.

The origin of mineral coal may be traced back to the decomposition of vegetable remains which flourished in ages past. From the surrounding formations, and the depth at which the oldest coal-beds are found, it is calculated that the vegetation which has been converted into coal must have had its existence not less than two million years ago.

Coal varies in quality and is of different nature according to whether the vegetation by the decomposition of which it is formed, consisted of marine, land, or marsh growths; but so far as the production of gaseous and liquid fuels is concerned, it suffices to differentiate merely between those coals which are rich and those which are poor in gas. The process of formation of mineral coal is not yet completed, and even at the present time its composition continues to change slowly. This is shown by the great or small variations in the gases—methane, marsh-gas, or carburetted hydrogen, and carbonic acid, etc.,—which occur in all collieries. Attention may be called to the continuous loss of gas by the coal, due to the heat of the earth and to the pressure of the rock strata over the coal seams. It is not possible to turn to account in any practical way these natural gases—marsh gas, carbonic acid —which issue from coal workings. Up to the present time, in fact, these gases have been looked upon as irremediable evils against which it is necessary to take special precautions.

Liquid fuel derived from mineral coal is not found in a natural state, and to within the last few years it was obtained solely in the form of tar, from common coal or brown coal, carbonised or dry distilled; that is to say, heated in the absence of air in closed retorts.

By further distillation of coal tar by itself, liquid hydrocarbons, known collectively in the trade as crude benzol, are obtained, these consisting of a mixture of benzene, toluene, and xylene. This crude benzol is eminently suitable for working engines, but was formerly obtainable in quantities much too small for its use as an engine fuel to become general. Only 40 lbs. to 50 lbs. of tar are produced by the carbonisation of 1000 lbs. of common coal,

Digitized by Google

and from this tar only 1 to 1·5 per cent. of crude benzol can be produced. Moreover, for some of the components of crude benzol, there was a ready market in connection with the colour industry. Now, however, these conditions are materially altered, the change having taken place on the discovery that the extraction of the benzol from coke-oven gases was feasible. Larger quantities of crude benzol are now obtainable, and this substance is found to have many advantages over the distillates of crude petroleum.

As these liquid distillates of common coal—benzol, etc.—will, without doubt, play a very important part in the future, it perhaps will be of interest to give a brief description of the method by which they are obtained.

As already stated, the quantity of benzol given off by gas-tar is very small. It is present in much larger quantities in lighting gas itself, which contains twenty times as much as the tar simultaneously produced. Unfortunately, it must not be removed from the lighting gas, as the lighting power of illuminating gas is dependent upon the percentage of benzol it contains. But conditions are much more favourable in the case of coke-oven gas, a by-product in the manufacture of coke, which a few years ago was only used for firing boilers. It is true that coke-oven gas contains less benzol than lighting gas (the treatment of 1000 lbs. of coal yields about 7 lbs. of crude benzol), but it is produced in such large quantities that the benzol obtained from it in one single year, 1906, amounted to about 70 million kgs. (154 million lbs.). As coke-oven gas is only used for heating and never for lighting purposes, all the crude benzol it contains may be removed without detrimental effect. The treatment of coke-oven gas for the recovery of crude benzol and other by-products, prior to its use for heating purposes, was introduced in Germany towards the latter end of the 'eighties. From that time onwards, the production of benzol increased to such an extent that its price, which stood at 400 marks per 100 kgs. (£203 per ton) in 1882, fell to 21 marks (£10, 10s.) in 1901. For the treatment of coke-oven gas to remain profitable, it became necessary to find other and wider fields than hitherto existed, in which benzol might be put to advantageous use. With its application to motor uses, an important market was opened up, and one having before it immense prospects. As crude benzol can be resolved by inexpensive methods into its component parts, which have respectively a high and low boiling point, it is specially well adapted for use as an engine fuel. The component which boils at a low temperature is utilised in the colour industry, while that boiling at a high temperature is better suited for motive power. The two products, therefore, are put to uses so distinct that the sale of one is in no way prejudicial to that of the other. This decomposition of crude benzol is due to the Rütgerswerke Company, which has placed upon the market, under the name of "ergin," a mixture of benzol distillates, which can be used for most internal combustion engines and which is actually the cheapest fuel of its kind procurable.

The fact that brown coal can be made to yield liquid fuel has been known for a long time. In the case of this class of coal, the liquid fuel obtained is

Digitized by Google

known as "solaröl"; it is obtained in the brown coal distilleries, of which the most important are situated in the neighbourhood of Leipzig and Halle.

The brown coal used for this purpose is of an earthy nature and will not bear handling or transporting. In contrast with the process by which common coal is treated and which yields coke as the main product, and benzol, ammonia, and coke-oven gas as by-products, brown coal yields tar as the main product, from which paraffin and solaröl are subsequently obtained. The coke ash, which remains in the oven, and the gas form, in this instance, the by-products. The former is used, under the name of "Grude coke," in kitchen fires, while the gas serves for heating boilers or for driving gas engines.

By the dry distillation or carbonisation of peat, wood, rosins, and fats, liquid fuels are also obtained which are suitable for working gas engines. So far, however, they have met with no practical application, while at the same time they are far too costly and not easily obtainable.

(c) Alcohol.

In addition to the distillates of crude petroleum and coal, alcohol forms a fuel which possesses many qualities that make it especially suitable for use in motors. Alcohol can be obtained in many different ways, the most common method being the fermentation of vegetable matter containing sugar, or a large proportion of farinaceous substances. In Germany, the cheapest raw material at the present time for the production of alcohol is the potato. It may happen, however, sooner or later, that alcohol will be obtained by some different method, or from other vegetable matter cheaper still.

Potato alcohol, as found on the market and as used for working engines, is known as potato spirit. It is diluted with 10 to 15 per cent. of water, and rendered non-potable by the addition of fusel-oil. Its price varies with the abundance of each potato harvest, and this fact has greatly hindered its general introduction as a liquid fuel for engines. In order to meet this difficulty, the trust of German spirit manufacturers decided, about five years ago, to sell motor spirit at a uniform price over the whole of Germany up to 1908, provided the engine owners each undertook to buy annually 5000 kgs. (11,000 lbs.). The price was fixed at 15 marks per 100 kgs. (about 6s. 8d. per 100 lbs.) for the winter, from November 1st to May 15th; and 16 marks (7s. 3d. per 100 lbs.) for the summer months, from May 16th to October 31st. At these prices, the cost of using spirit in engines is approximately equivalent to that of using petrol.

This decision on the part of the spirit manufacturers has greatly aided the introduction of spirit motors. Over this same period, however, the prices of spirit for other purposes have varied enormously, and at times they have risen by over 100 per cent. So far as the author is aware, the spirit trust has not renewed its agreement with the engine owners, and thus the development of alcohol engines has received another check. The motors shown at the seventeenth exhibition held by the German Agricultural Society in 1903 at Hanover, were almost exclusively alcohol motors. At the exhibi-

Digitized by Google

tion held in 1906 at Berlin the number of engines using petrol and "ergin" already preponderated to a somewhat large degree. At the exhibition held this year (1907) there was scarcely one alcohol motor to be found.

As our supplies of coal and crude petroleum are not renewable, and do not exist in inexhaustible quantity, there is no doubt but that we shall have to depend more and more in the future upon such liquid fuels as can be produced from existing vegetation. So long as the sun shines upon the fields, we shall be able with safety year by year to depend for the production of spirit upon the fruits of the earth. On the other hand, we are in uncertainty as regards the coal- and oil-fields which may become available. By using mineral fuel, we are utilising the heat which the sun gave out thousands of years ago; by using vegetable spirit, we are utilising the heat of the sun given off during the present period. The more nearly the supplies of mineral fuels become exhausted, the more dependent will we be upon vegetable and animal kingdoms. The agriculture of the future, therefore, will not only be devoted to the raising of crops suitable for the nourishment of men and animals, but also, and in a constantly increasing proportion, to the growing of plants and fruits from which concentrated fuels may be obtained; and these will be employed for the purposes of producing heat, power, and light, which are not less important to us than food itself.

Digitized by Google

CHAPTER II.

LIQUID FUELS AS A MEANS FOR POWER PRODUCTION.

NOTWITHSTANDING the abundance of natural fuels, there is scarcely one which, without some preliminary treatment, can be used in internal combustion motors. Nearly all of them are chemically impure; that is to say, they possess other properties besides those of a simple fuel. Thus far the only successful internal combustion motors have been engines worked with gaseous or liquid fuels; and no practical internal combustion motors using fuel in a solid form have been built.

In the present volume we shall deal only with engines using liquid fuels. All these fuels are industrial products which were not, originally, intended for use for engine working. To utilise them, the engine-builder was forced to adjust the design of his motor to suit their several properties. More recently, however, it has been abundantly proved that the fuels can also be made to suit the engine in which they are to be used for the generation of power, and it is to be hoped that, by the collaboration of thoughtful manufacturers with the engine-builders, great progress in engine construction will result.

A good fuel for engines should combine in itself the following characteristics:—

1. High calorific value.
2. Cheapness. It must be easily procurable.
3. Complete combustibility, leaving no deposit of a solid or liquid nature.
4. Absence of smell, both of the fuel itself and of its products of combustion.
5. It should be easily vaporised or atomised.
6. Its vapour, or finely atomised spray, should be capable of mixture with air, within the widest limits, resulting in a stable association.
7. Certainty of the firing of the mixture of fuel and air by the ordinary methods employed for ignition.
8. Possibility of compression of the mixture to the highest limits.
9. Minimum fire and explosion risks.

Bearing in mind the nature of these requisite characteristics, it will be found that the available liquid fuels may be classified as follows:—

Benzine or petrol having a specific gravity of 0·65 to 0·71.

Digitized by Google

Paraffin or kerosene having a specific gravity up to 0·865.
Crude benzol.
"Ergin."
"Solaröl."
Spirit.

Petrol.

The calorific value of petrol is very high; it ranges from 10,000 to 10,400 calories[1] (18,000 to 18,720 B.Th.U.); while common coal has a value of only 7500 (13,500 B.Th.U.), coke 6500 (11,700 B.Th.U.), and wood 2800 (5040 B.Th.U.). The price of motor petrol has fluctuated considerably. In 1894, when the first German edition of this work appeared, petrol of 0·68 specific gravity cost 16·75 marks per 100 kgs. (about 7s. 6d. per 100 lbs.); in 1897, it cost only 13 marks (about 5s. 9d. per 100 lbs.); in 1901, its price was 29 marks (about 13s. per 100 lbs.); and in July 1907, 37 marks (about 16s. 8d. per 100 lbs.) (1s. 8d. per gallon).

It should be remarked here that by a prescription of the German Federal Council dated 2nd December 1885, petrol, "ligroin," naphtha, and other petroleum distillates of specific gravity less than 0·79, employed for power generation, may be used free of duty, subject, however, to certain regulations, so far as industrial purposes are concerned.

The tax levied on petrol amounts to 7·75 marks per 100 kgs. (about 3s. 6d. per 100 lbs.).

A suitably proportioned mixture of air and petrol will, when ignited, result in complete combustion, there being no fluid or solid residue. Engines run on petrol, provided that cylinder lubrication is properly carried out, seldom require cleaning, and the exhaust gases have no unpleasant smell. When it happens that automobiles using petrol emit a disagreeable odour, the cause of this is not attributable to the products of combustion of the petrol, but to the half-burnt lubricating oil, which, in cases of over-lubrication or defective construction, is driven into, through, and out of, the exhaust pipe. As will be subsequently explained, oil vapours have the property of remaining suspended for a long time in the air, and to these must be traced the objectionable smell which automobiles leave behind them.

Petrol belongs to the most volatile class of fuels used for internal combustion engines, and at temperatures as low as about 0° C. (32° Fahr.), it evaporates naturally in quantities sufficient to form, with air, mixtures which, when burnt in confined spaces, result in great increase of pressure, and it is in this way that they can be utilised for driving engines. The volatility of petrol increases rapidly with a rise of temperature, and if its temperature be raised even to 15° C. (59° Fahr.), the original mixture would be so enriched as to contain more fuel than could be burnt,

[1] The heat-unit used here is the quantity of heat required to raise the temperature of one kilogramme of water through one degree centigrade. The calorific value of the various fuels given is expressed in terms of kilogramme-calories per kilogramme. This quantity may be converted to B.Th.U. per lb. by multiplying it by 1·8.

Digitized by Google

and more air must be supplied to it in order to render it suitable for use in engines.

The mixture of petrol vapours with atmospheric air takes place with extraordinary rapidity. The small four-cycle petrol engines of motor-cycles have a speed of over 2000 revolutions per minute, so that each separate mixing period occupies only the seventieth part of a second, and in spite of this, the firing takes place regularly, and the power developed by these motors is immensely satisfactory.

The association of the petrol-vapour and air in these mixtures is also perfect. The so-called air-gas plants,[1] which supply whole towns with gas, afford proof of the fact that mixtures of petrol vapours and air, used in this way, can be conveyed over great distances through pipes, and distributed without losing in any way their inflammable and combustible qualities.

With reference to the inflammability of petrol-air mixtures, it should be mentioned that of the methods of ignition now common (*e.g.* incandescent bodies, electric spark, and heat of compression), the first two only are utilised with petrol motors.

In the first of these, ignition-tubes are made red-hot, to secure firing of the charge at the right instant. The provision and maintenance of a safe and economical lamp for heating these ignition-tubes, is a matter of some difficulty, and, as the Fire Insurance regulations only permit of the use of heating lamps on condition that certain special precautions are taken, tube-ignition is seldom resorted to, and thus, in the case of petrol motors, ignition by means of the electric spark alone remains available. Low-tension magneto-electric ignition devices are used for stationary slow-speed engines; in high-speed automobile engines, the voltage is raised by the use of an induction coil. In petrol motors a high compression of the charge is not permissible. Even at 5 atms. (73·5 lbs. per sq. in.), knocking occurs in the engine, due to premature ignition, and this reduces its power. The least favourable point connected with the use of petrol is the great risk of fire and explosion with which it is attended. Although the Fire Insurance Companies prescribe a large number of precautionary measures,[2] having reference to the installation of petrol engines, and the insurance policy provides for their due enactment, too great a care in the use of this fuel is hardly possible. With the great increase of recent years in the use of automobiles, it has become necessary to store in the towns large quantities of petrol, and the construction of appliances by means of which the fire risks due to the presence of large stocks of petrol will be reduced to a minimum, is most commendable.

[1] Under the name of "air gas" are known all the lighting gases formed by the mixture of the vapours of the light hydrocarbons with atmospheric air, such as "aerogengas," "benoydgas," "homogengas," etc.

[2] The conditions laid down by the insurance companies are reproduced in the chapter dealing with the installation of engines.

Digitized by Google

Paraffin Oil or Kerosene.

Under the name of paraffin, we class, for engine purposes, all the distillates obtained within the temperature limits of 150° to 270° C. (302° to 518° Fahr.) having specific gravities between 0·73 and 0·86.

The calorific value of the different sorts of paraffin oil depends upon the source of supply and the care taken in the distillation; it may be taken as varying from 10,000 to 11,000 calories (18,000 to 19,800 B.Th.U.). Among all the fuels on the market, therefore, paraffin oil combines the greatest calorific value with the least bulk, and for this reason, particularly if only the distillates given off at high temperatures be considered, paraffin oil is much cheaper than petrol. Paraffin oil, such as is used in Diesel engines, costs 10 to 12 marks per 100 kgs. (about 5s. 4d. per 100 lbs.), while petrol costs 37 marks (about 16s. 8d. per 100 lbs.). These heavy distillates are obtainable in large quantities, and conform also in every way to the condition requiring their complete combustion, *i.e.* the absence of any solid or liquid residue, when the engine supplies, etc., are properly regulated. Judged, therefore, with reference to its calorific value, cheapness, and complete combustion, no objection can be raised to the use of paraffin oil or kerosene. It does not, however, satisfy equally well the other conditions required of a good fuel for internal combustion engines. The cheap and so-called heavy distillates have a strong and disagreeable odour; the products of combustion from most paraffin-oil motors are so obnoxious owing to their objectionable smell, that energetic means have been taken to restrict the use of such engines in towns and thickly populated districts. In the Diesel engine, and others which work on a similar principle, the paraffin oil is completely burnt up, and the exhaust is practically invisible and without smell; but the strong odour of the fuel itself in the case of these engines, is also noticeably disagreeable in small and badly ventilated engine-rooms.

But the greatest obstacle to the use of paraffin in the engines built on the usual gas and petrol motor types, lies in the difficulty experienced in forming and maintaining a proper mixture of paraffin and air. All the kinds of paraffin available only begin to give off vapours at temperatures higher than that of the air, and the fuel must therefore be vaporised by artificial means. Unlike petrol, paraffin is not a substance with closely defined limits of distillation temperatures, but is a combination of hydrocarbons, the boiling points of which lie between the limits of 150° C. and 300° C. (302° to 572° Fahr.). To this is added a further disadvantage, for it happens that, even at temperatures below 572° Fahr., a chemical decomposition of paraffin into "fat-gas" commences; this is an undesirable feature, as it entails a modification in the proportions of the mixtures employed. Hence, in engines in which mixtures of a certain definite composition are to be formed and maintained for a given length of time, evaporation must not take place at either too low or too high a temperature; and care must also be taken that during the time the mixture remains as such in the engine, it must neither become too cool nor too hot.

Digitized by Google

A fall in temperature below 572° Fahr. is less detrimental than a rise above that limit, for the paraffin vapours, as soon as they come into contact with cooler air, do not return immediately to the liquid state, but remain suspended, forming a kind of mist or, in other words, minute bubbles of liquid paraffin containing air. This atomised paraffin may be easily mixed with a further supply of air, and so consumed. But, if these bubbles encounter solid bodies, impinging, for instance, on the walls of the cylinder or other parts of the engine at a lower temperature than that at which they vaporise, they return immediately to the liquid state and cannot thus be efficiently used.

The vaporisation of paraffin in large quantities in advance, and its utilisation in the form of vapour in a manner similar to that in which a gas would be employed, has not been found practicable, as, in this case, it is a question of dealing with real vapours and not with permanent gases. Better success has attended attempts to produce a uniform mixture, by carefully measuring the amount of finely sprayed paraffin required for each stroke, the air necessary to complete combustion being supplied with it or immediately after its introduction into the cylinder.

The design of apparatus suitable for performing the necessary function of measuring, vaporising, and heating the paraffin; the ways and means of effecting the supply of the air required; the protection of the mixture against undue cooling, are problems, for the solution of which all manner of devices have been suggested during the last decades. It cannot be said, however, that any solution of an altogether satisfactory nature has, so far, been found. It will thus be seen that both the formation of the desired mixture and its preservation as a permanent vapour are, when paraffin oils are employed, matters of no little difficulty. So troublesome are these points, in fact, that endeavours have been made to construct engines in which at least one of these characteristics should be eliminated. Very satisfactory examples of motors working under such conditions can now be cited, as, for instance, the well-known Diesel engine and motors of this type which are designed on these principles. In these engines no mixture is formed; the petrol is consumed the instant it comes in contact, in a finely divided form, with the highly heated air.

Of the properties of paraffin considered as fuel for combustion engines, there still remain to be mentioned its inflammability, the behaviour of the mixture under compression, and the fire risks its use entails. With regard to its inflammability, it may be said that, of all liquid fuels, it is set alight at the lowest temperature. In paraffin motors fitted with tube-ignition, the mixture is ignited with certainty and at the correct instant, even if the temperature of the tube is so low that it is below red-heat. This characteristic of ready inflammability has been taken advantage of in the Diesel engine, and the ignition of the paraffin spray injected is effected without risk of misfire by the heat of the compressed air of combustion alone. It may be remarked here that the charge of atomised paraffin is introduced at the moment of maximum compression.

Digitized by Google

One result of this feature of ready ignition of paraffin-oil vapour, is that when mixed with air, a high degree of compression is not possible, as the increasing density of the hot air, and hot paraffin particles, facilitates ignition. The combustion of the mixture under such conditions takes place with extraordinary rapidity, and is in the nature of an explosion, for ignition occurs throughout the whole volume of gas or vapour simultaneously, and not as in the earlier types of engines, from one point only. As a compression pressure of 4 atms. (58·8 lbs. per sq. in.) is sufficient to produce automatic self-ignition, it is not possible to utilise the great advantages of high compression in engines using a ready-made mixture. In Diesel engines, on the contrary, the high compression of the air can be utilised to the best advantage; in the case of these engines combustion will never resemble an explosion, for no compression of the mixture of air and paraffin vapour occurs, the commencement and duration of the process of combustion being dependent on the instant at which the charge of paraffin spray is forced into the cylinder and on the length of time occupied in introducing the charge.

As regards risk of danger by fire, paraffin may be said to comply fairly well with the requirements, for, although it has a low flash-point, it is the least dangerous of all the liquid fuels. A well-lighted match thrown upon the surface of paraffin does not set it alight. The regulations in force in Germany provide that only such paraffin-oil distillates shall be put on the market as have a flash-point, *i.e.* give off combustible vapours at a temperature not lower than 21° C. (69·8° Fahr.). Should these vapours become ignited, this is not accompanied by ignition of the liquid paraffin oil; the flames are extinguished without communicating sufficient heat to the surface of the liquid to result in the formation of further vapours for feeding the flames. It is only when the liquid is heated thoroughly to a temperature above 30° C. (86° Fahr.) that a steadily burning flame is possible.

The low fire risk of paraffin oil compared with that which is involved in the use of other liquid fuels, is its best recommendation, and the introduction of a good, cheap, safeworking paraffin motor would be an assured success, since the use of the other liquid fuels, petrol, benzol, and alcohol, all entail great dangers.

Paraffin has not always been so free from danger from fire; when first distilled the processes were not carried out with the care that now obtains, and it contained in solution, in the earlier days, no small amount of volatile hydrocarbons, which in evaporating led to the formation of explosive mixtures. In addition to this, paraffin was generally shipped in wooden casks, which are not gas-tight, and the vessels carrying paraffin oil or kerosene from America were exposed to the danger of explosions. These oil ships were furnished with a windmill or aeromotor on deck, which worked an air-pump for exhausting the gases from the ships' holds. But in spite of these precautions, numerous accidents occurred, and in the early 'eighties great sums were paid for efficient devices designed with a view to preventing explosions on oil-carrying vessels. One device which was tried consisted of placing in

Digitized by Google

the ships' holds tanks containing liquid carbonic acid; these could be opened from on deck, and by this means the whole cargo could be immersed in carbonic acid gas, an effective fire-proof covering.[1]

Now that the volatile constituents of crude oil have found a large market and fetch higher prices than even lamp oil, their separation is carried out with great care. The inflammability of lamp oil now forms the subject of suitable rules and regulations, and hardly any explosions now occur through the storage of paraffin oil, or, in other words, kerosene.

Benzol.

The value of benzol as a fuel is as high as that of petrol, being about 10,300 calories (18,540 B.Th.U.), but it costs much less; the present price is 22 marks per 100 kgs. (about 10s. per 100 lbs.).[2] Up to the middle of the 'eighties benzol was obtained from gas tar only, and was mainly used in the aniline dye industry. At that time it was so expensive that its use in engines was altogether out of the question. But when, in the early 'nineties, it became possible to produce benzol in large quantities from coke-oven installations, the output soon exceeded the demand, the price fell to 20 marks (about 9s. per 100 lbs.), and fresh markets had to be found. The last means of making use of it was soon found to be its employment as fuel for internal combustion engines.

When produced as a clear distillate, benzol burns without leaving any solid or liquid deposit, as do petrol and paraffin. Its smell, however, is unfortunately rather strong—stronger, in fact, than either that of petrol or lamp-oil. Its products of combustion are, on the other hand, almost odourless, and not anything like so offensive as the smell of the burnt gases of paraffin motors.

The formation and maintenance of the explosive mixture is, however, not so easy as with petrol. Nevertheless, motors using benzol can be run in cold weather without having to resort to warming, and petrol motors may be run with benzol without any alteration. The main advantage of benzol over petrol and paraffin is that it allows of much higher compression than is possible with paraffin. Again, working on benzol at present prices, is much cheaper than with petrol, since high compression can be taken advantage of.

Risk of fire with benzol is not much less than with petrol, and in this respect it ranks below paraffin. Enterprising chemists and engine builders soon found that the properties of benzol could be improved, if the fire risks its use entails and its disagreeable smell could be overcome without materially altering its good qualities. It was found to be only necessary to separate from it its highly volatile and low volatile components, for both of which there are favourable markets. The residue thus obtained forms an ideal cheap fuel, one

[1] In a similar way, large quantities of petrol in bulk are protected from contact with air by carbonic acid gas.

[2] A purified commercial benzol can be obtained from the Deutsche Benzol-Verreinigung G. m. b. H., Bochum.

Digitized by Google

emitting but little smell, retaining its heat, highly compressible in mixture, and involving no fire risks.

The Rütgerswerke Chemical Company, Berlin, in particular, has done much towards solving this problem, and for several years has placed upon the market a liquid fuel called "ergin," for which there has been a ready sale. "Ergin" now costs 17 marks per 100 kgs. (about 7s. 6d. per 100 lbs.); it has a calorific value of 10,300 heat units (18,540 B.Th.U.). With regard to ease of formation and maintenance of the explosive mixture, it is but little inferior to petrol and much superior to paraffin; it is easily fired by the usual methods of ignition; permits high compression; entails as little danger by fire as does paraffin; and, like the latter, is subject to less stringent police enactments as regards storage than petrol. High compression being resorted to, consumption is much smaller than with petrol or paraffin. "Ergin" being also cheaper than petrol for the same weight, the horse-power-hour of an engine using this fuel works out at 3 to 5 pfs. (·3 to ·5d.) against 10 to 12 pfs. (1 to 1·2d.) in the case of an engine using paraffin. Working with petrol is, of course, dearer still.

Benzol, and also "ergin," can be mixed with alcohol, and mixtures of this nature are used in combustion engines to a considerable extent.

Alcohol.

In the case of the fuels derived from crude petroleum and coal, one has to deal with substances rich in carbon, to which is due the fact that these fuels burn in the atmosphere with a heavy and sooty smoke. Alcohol belongs to the class of fuels which are low in carbon; when lighted in air it burns with a blue, clear, non-sooty flame. If its chemical composition be examined, it will be at once evident also that its calorific value is much lower than that of the fuels considered above. We have already stated that paraffin has a calorific value of 11,000 heat units (19,800 B.Th.U.); petrol and benzol, values up to 10,300 (18,540 B.Th.U.); but alcohol has only 5500 to 6000 (9900 to 10,800 B.Th.U.). Its cost is also higher than that of paraffin and benzol, and fluctuates very much, being entirely dependent upon the result of the potato harvest.

Alcohol conforms fairly satisfactorily to the requirements, so essential to a good engine fuel, of burning without leaving a deposit; alcohol spirit-motors are troubled with no solid or liquid deposits, even when they receive but little attention. On the other hand, the conditions are suited to the formation of rust, and this has a very bad effect upon the cylinder walls and the valves. A satisfactory method of preventing this formation of rust has been found in running the motor for a few minutes before it is stopped, with petrol or benzol, instead of with alcohol right up to the finish. The provision of special devices is also necessary for working engines with these fuels. These have for their object the complete removal of all remains of alcohol from the interior surfaces of the engine.

By the absence of smell in the alcohol itself, and in its products of com-

Digitized by Google

bustion, this fuel has attained to a very prominent position. As it smells the least of all liquid fuels, its use for automobiles has been rendered compulsory in several large towns.

Alcohol is little less volatile than petrol; it must be heated in order that vaporisation and the formation of a working mixture may be produced, and, to accomplish this, use is made of the exhaust gases. The engine is generally started and run with petrol until the exhaust pipe is sufficiently heated to vaporise the alcohol spray and maintain a constant quality of mixture The introduction of the charge takes place through a jacket round the exhaust pipe or, conversely, through the pipe itself, the exhaust gases being led out through the jacketing.

Ignition of the mixture of air and alcohol does not take place at so low a temperature as with paraffin and petrol, but at about the same temperature as lighting gas. In most cases, ignition is accomplished by means of electricity; but an ignition tube, heated by an alcohol vapour lamp, is all that is really necessary. The most prominent characteristic of alcohol is that it lends itself readily to high compression; it may even be said that it is mainly due to this feature that its introduction as an engine fuel has been attended with success, for if it is considered from the point of view of thermal qualities alone, the use of alcohol works out at almost double the cost of that of petrol or paraffin.

The great saving of fuel which accompanies the use of high compression—and in alcohol motors compression may safely be run up to 16 atms. (235 lbs. per sq. in.)—is, however, so appreciable that 1 horse-power-hour can be produced for approximately the same weight of alcohol as of petrol.

The danger of fire and explosion when working with alcohol is less than with petrol, but greater than with paraffin oil. A lighted match thrown on the surface of alcohol ignites it immediately. But motor alcohol does not form any explosive mixtures with air at ordinary temperatures. The storage of alcohol is not subject to the stringent regulations in force for petrol, but to the more lenient ones drawn up for paraffin oil. A mixture may easily be made of 90 per cent. of alcohol dissolved in benzol or "ergin," and with such a solution the power of the engine is increased considerably. Solutions formed of equal parts of alcohol and "ergin" are frequently used. In preparing such a solution, care must be taken to add the "ergin" or benzol to the alcohol, and not to perform the operation in the reverse way.

Digitized by Google

CHAPTER III.

THE DEVELOPMENT OF THE PETROL AND PARAFFIN MOTORS.

THE first records of petrol and paraffin engines may be traced back to a period contemporaneous with the first gas engines. In an English patent taken out as early as 1838 by one William Barnett, it was clearly stated that the gas engine there referred to could also be worked with some easily volatilised hydrocarbon. Although it may be taken for granted that the Barnett engine was not a practical one, but a design which existed solely as a "patent," the fact shows that even at that early date it was fully realised that an easily volatilised hydrocarbon could be used for driving motors.

Apart from the circumstance that in the year 1867, so-called atmospheric gas engines, placed on the market by Otto and Langen (the predecessors of the Gasmotorenfabrik Deutz), were worked in different ways with gasoline gas produced by causing air to pass over the surface of petrol, the first engine worked direct with petrol may be said to have been that built in 1873 by Julius Hock, of Vienna. This was known at that time in the trade as a *petroleum engine*, and was built in Germany by the Maschinenfabrik Humboldt, Kalk, near Cologne.

This name really implied too much, for it was not actually the less dangerous lamp oil which was used, but petrol, and such an arbitrary designation resulted in all manufacturers of petrol motors classifying their engines as "petroleum" motors as recently as the latter end of the 'eighties.

When, later on, in the early 'nineties, the engines which actually do work with paraffin made their appearance, manufacturers were obliged to amplify their announcements by stating that their engines really did work with petroleum oil fuel. These matters, however, gradually became straightened out; automobiles came more and more to the front, petrol came to be the best fuel for this work, and, at the present time, no maker hesitates to call his engines which are worked with the latter fuel, petrol motors.

The Hock Petrol Engine.—The engine illustrated in fig. 1 works on the Lenoir gas-engine cycle. The piston draws in the explosive mixture during a part of its forward stroke; the mixture is ignited and performs work, driving the piston forward to the end of the stroke.

The explosive mixture consists of air and petrol spray, air being drawn through the nozzle G and the fuel through the nozzle *b*. The current of

Digitized by Google

air crosses the path of the incoming fuel which is thereby atomised. The air and fuel spray thus form the explosive mixture. Ignition is performed by means of a gasoline gas flame, which is produced afresh for each complete cycle at the moment when ignition must take place. This is accomplished by directing a jet of this gas through a steadily burning flame, against a flap valve in the cylinder cover. At the correct instant this valve, by reason of the suction of the piston, is only held lightly on its seat, and it opens sufficiently for the flame to come in contact with the charge. The periodic formation of the gasoline gas jet is obtained by a connecting rod working a kind of bellows which communicates with a tank filled with gasoline.

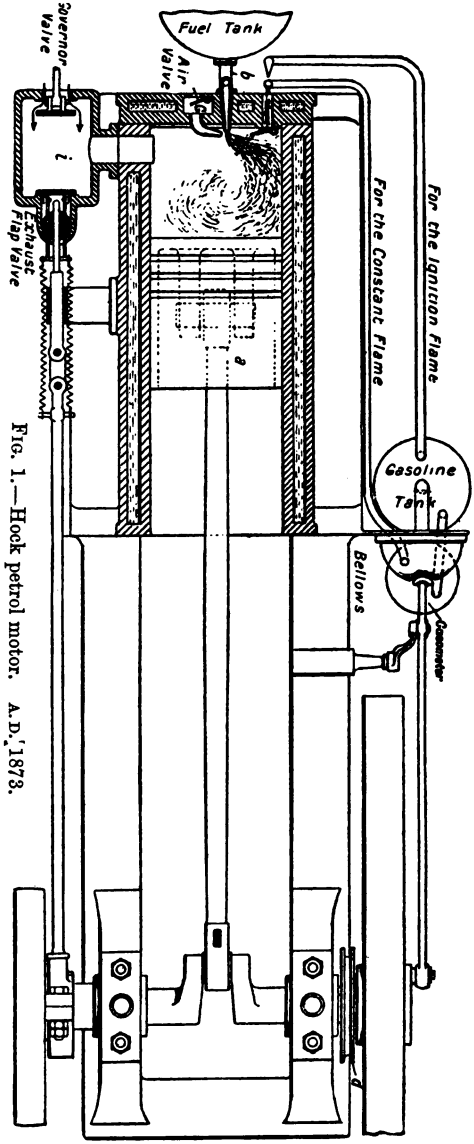

FIG. 1.—Hock petrol motor. A.D. 1873.

At the moment the explosion takes place, the air inlet and the ignition valves close automatically. On completion of the working stroke, the exhaust valve is opened by a rod driven off an eccentric on the shaft, and the products of combustion are allowed to escape to the exhaust.

The speed of the engine is regulated by allowing of the formation of a stronger or a weaker mixture as described. According to the adjustment of the air regulator valve in the casting *i*, a large or small volume of "additional" air is supplied to the mixture, the resulting pressure of combustion varying in proportion.

If the Hock engine and valve gear be considered from an engine-builder's standpoint, it can hardly be termed other than an experimental engine. It contained a large number of original features. For the first time, use is made of the open-ended cylinder, of the trunk piston and direct drive on to

Digitized by Google

the crank, a system now in general use for modern gas, petrol, and paraffin engines of comparatively small power. The Hock engine, of course, was never widely adopted.

In 1876 a new petrol motor was introduced in America, which, on account of its system of working, aroused great interest. This was the

Brayton Petrol Engine,

illustrated in figs. 2 and 3.

All gas engines built up to that time might be classified as "mixture-forming" engines, in which the charge, drawn into the cylinders, was burnt after ignition by electric sparks, giving consumption results which were largely dependent on the nature of the fuel. The process employed in this engine was quite different, regulation being obtained by mechanical means.

In the Brayton engine, the fuel and the necessary air are separately compressed in the working cylinder, and ignition takes place by an internal flame burning under pressure, the instant they come into contact with each other. Compression and combustion of the fuel in the working cylinder occur during only a small portion of the stroke; for the remaining portion of the stroke, the expansion of the products of combustion takes place and useful work is performed. The running of the Brayton engine resembles, therefore, that of the steam engine. The cut-off in the steam engine corresponds here to the period of combustion. At the end of the stroke, action is reversed and the gases are driven out through the exhaust valves.

As shown in fig. 2, an air-compressor is arranged beneath the working cylinder; this pump supplies a receiver with compressed air, and this air is delivered from the receiver to the working cylinder through inlet valves. On its way thither it passes through compartments filled with asbestos, separated from the cylinder by perforated metal plates or sheets and layers of wire gauze. The porous substance is constantly kept impregnated with petrol from a small pressure pump, so that the air flowing through it becomes saturated with the petrol vapour, thus forming a combustible mixture which is ignited by the flame burning under pressure. The wire gauze prevents any back-flash from reaching the mixing chamber. Petrol vapour is used for the ignition flame, which must be kept burning all the while the engine is running. This vapour is supplied by the following means:—A small pipe conveys from the compressed air-receiver to the vaporising chamber a small supply of air, which is brought into contact with a portion of the petrol-impregnated asbestos. An inflammable mixture is thus formed in the clearance space, and may be set alight, at starting, through a hole fitted with a removable plug. The combustible medium, therefore, for both the ignition flame and for the driving or working flame, is derived from the same source, and firing of the fuel during the working-stroke is no more than an extension of the process of ignition to full and complete combustion of the charge. As the piston does not come in contact with the cold outside air, and is always

Digitized by Google

kept hot by the flame of the burning charge, it is necessary to encourage cooling by the use of hollow piston-rods. The motor must be started running

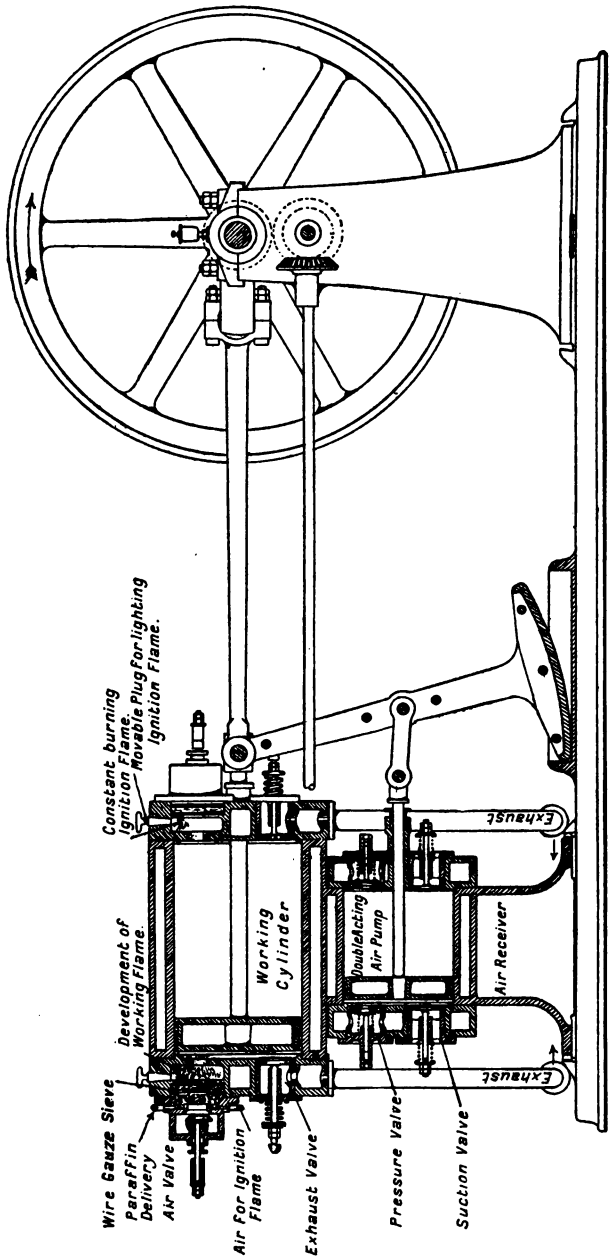

FIG. 2.—Brayton petrol engine. A.D. 1876. (Longitudinal section.)

soon after lighting the ignition flame, as this flame is extinguished as soon as its products of combustion accumulating inside the clearance space reach the

Digitized by Google

same pressure as that of the compressed air-receiver. For a similar reason the speed must not be allowed to fall below a certain limit.

The consumption of petrol per horse-power-hour is stated to have amounted to only $\frac{1}{2}$ *l* * $= \frac{1}{2} \times 0{\cdot}7 = 0{\cdot}35$ kg. (·77 lb.)—no more, therefore, than is consumed by a good oil engine of modern construction. The fact that a large number of patents were later taken out for engines designed on similar lines, is sufficient proof that the Brayton system was considered to be sound and of value. The working of the Diesel engine has some resemblance to it.

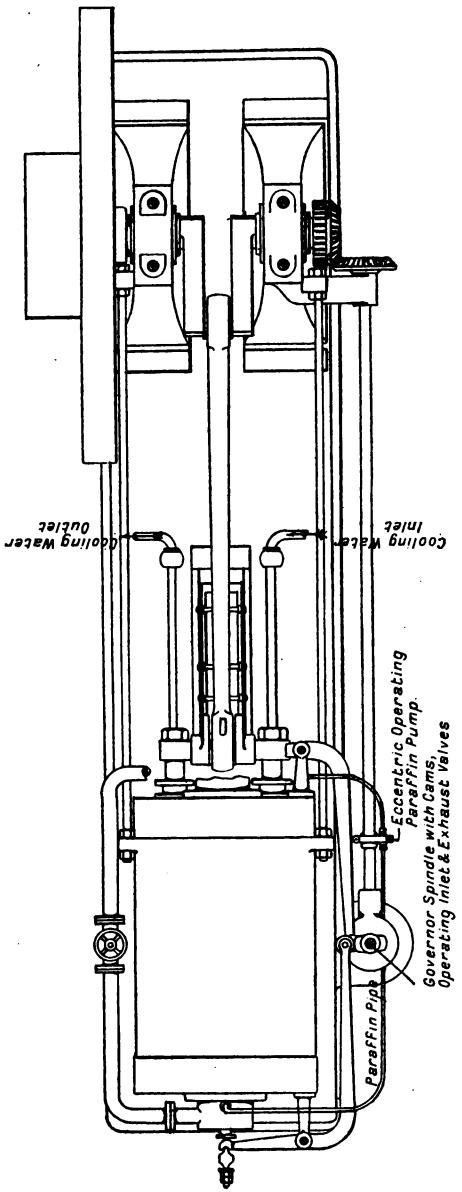

FIG. 3.—Brayton petrol engine. A.D. 1876. (Plan.)

The Brayton engine has also been built of vertical form, with inverted cylinders, and this design was the prototype of the Simon engine, which works on the same principle, and was in use for a certain time. A low gas consumption was also claimed for this engine, namely, 0·5 to 0·6 cubic metre (17·7 to 21·2 cubic feet) per horse-power-hour for small types of from 4 to 6 horse-power.

About this time N. A. Otto invented the four-stroke-cycle compression gas engine, which, up to the present time, continues as the standard type for most internal combustion engines. Gas-engine builders directed all their energy to the development of this engine, and in a very short time a petrol engine made its appearance, which worked on the same principle as that employed in the compression type of engine. This first really serviceable engine working direct with liquid fuel, viz., that of Wittig and Hees, was built in the late 'seventies and early 'eighties

* Half a litre.

Digitized by Google

by the Hannoversche Maschinenbau-Aktien-Gesellschaft, formerly Georg Egestorff.

This engine is illustrated in figs. 4, 5, and 6; it is, as will be seen, a two-stage engine. The mixture is formed in one cylinder, the second one being the working cylinder. The two pistons work on two cranks, keyed in line at 0°. On the pistons rising, mixture is drawn into the right-hand cylinder, while at the same time work is being performed in the left-hand one by the ignition of the mixture supplied to it. On the down-stroke the products of combustion are driven out of the working cylinder, and the fresh mixture is

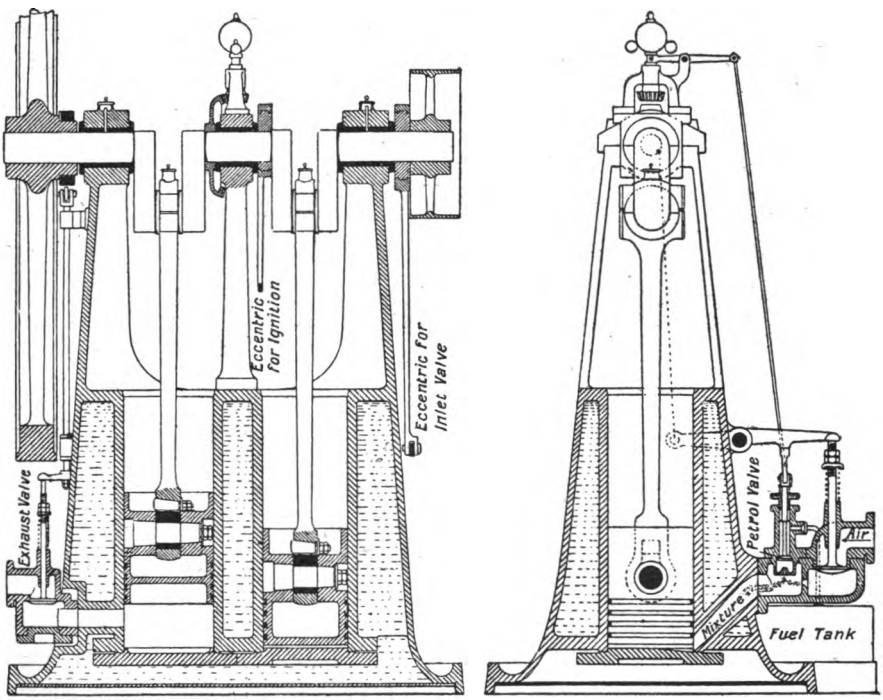

FIGS. 4 and 5.—Wittig & Hees petrol engine.

delivered to it from the right-hand cylinder which acts as a compressor. Loss of mixture by way of the outlet valve is prevented by the great distance between the outlet passage and the inlet port, and by loading the change-over valve with a spring. When the working piston is midway on the down-stroke, the exhaust valve is closed, and, to the still comparatively rich products of combustion, a fresh complementary charge then in the mixture pump cylinder is added by compression. As the mixture compressor piston travels right down to the bottom of its cylinder, and as clearance is provided for the charge, in the working cylinder only, the whole of the mixture is collected in the latter cylinder when the crank is on the dead centre.

The formation of the explosive mixture is performed, in this engine,

Digitized by Google

entirely on the so-called carburetting principle, which is now practically universally adopted in automobile-engines. Figs. 5 and 6 show the very simple devices used for this. An air valve and a petrol valve are mounted side by side in a common mounting, and both valves are mechanically opened on the suction stroke of the mixture pumps. The valves are separated by a diaphragm, in which a small opening is cut. Through this the air is drawn in, and being directed on to the jet of petrol, converts it into spray. The petrol tank, which is also seen in fig. 5, is made flat, and lies below the level of the petrol outlet in the engine; by this means an occasional leakage from the valve, if this should happen to fit badly, cannot occur, and the suction level of the petrol varies but little. This thoroughly simple arrangement has proved both satisfactory and durable.

That explosion motors would be found to be of the greatest importance for the working of stationary plant and of floating craft, was a fact early

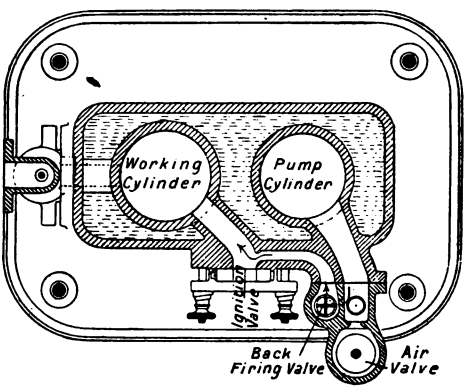

FIG. 6.—Wittig & Hees petrol engine.

recognised, and the management of the Hannoversche Maschinenbau-Aktien-Gesellschaft lost no time in fitting up one of these engines in a railway vehicle, which was used in their own yards, in order to test it in actual practice. Disputes over patents with the Gasmotorenfabrik Deutz, however, prevented the Hanover Company from proceeding further with their petrol motor, and this invention which was full of promise remained in abeyance.

In 1883, G. Daimler—who, until then, had been director of the Deutz Gasmotorenfabrik and established later the Daimler Motor Company—brought out a new petrol motor, which contained a number of novel features, and on which the present automobile motor is modelled.

Up to that time, even in the case of the smallest engines, the speed did not exceed 200 revolutions; but Daimler ran his new engine at 800 and more revolutions per minute. He chose the vertical inverted arrangement of cylinders, with crank shaft underneath, and with enclosed crank case in order that the mechanical parts might be protected from dust and from the action of the atmosphere. To Daimler is also due the introduction of a

Digitized by Google

common lubricating device for the piston, crank pin, and crank shaft bearings, from an oil well inside the crank chamber; he introduced also the handle for the easy starting of the engine.

Besides all these improvements, which are still incorporated in unmodified form in the latest automobile engines, Daimler provided his new motor with a novel system of ignition, which is in reality at the present day superior to all others. This was the well-known *tube-ignition device* which, although no longer used for automobile engines, is still preferred to others for smaller gas engines.

The increase in speed, now so common a feature, actually forms the chief service ren-

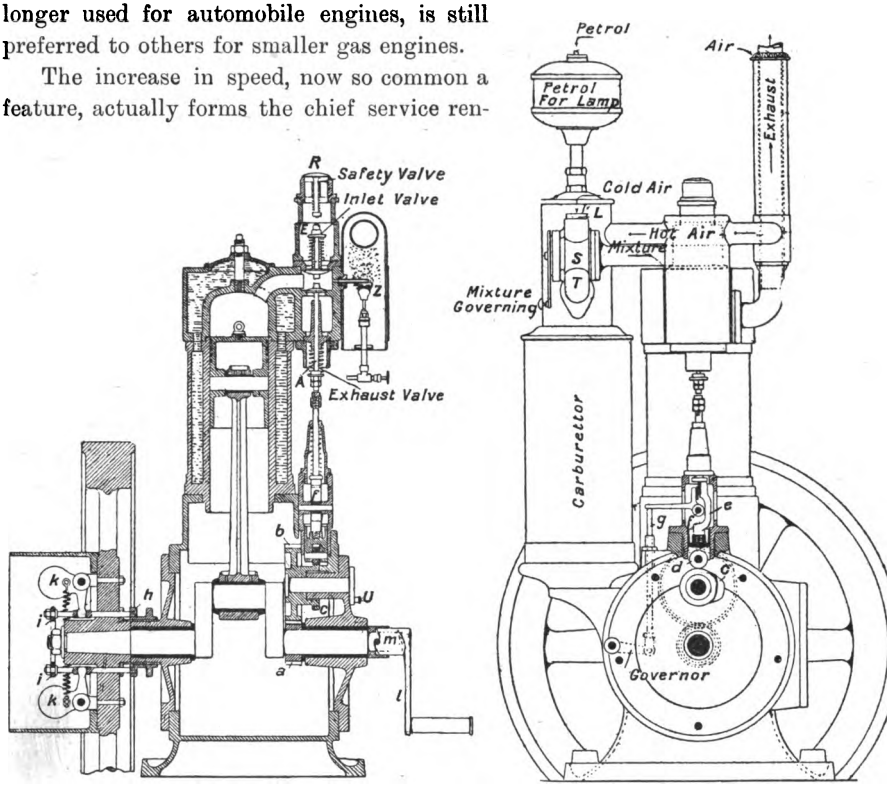

FIGS. 7 and 8.—The Daimler petrol engine.

deréd to the subject by Daimler in the matter of motor-car engines, for it provided a solution of the problem which had been worked at for fully a century, and resulted at once in an engine of large power and small weight.

Figs. 7 to 9 illustrate the Daimler engine as it was built in the later 'eighties for stationary installations.

For forming the working mixture, Daimler at that time did not have recourse to direct petrol supply, which as we have seen was the method adopted in the Hanover Company's engine, but used a device similar to that employed for the production of air-gas, in which air is passed through petrol so as to saturate it with petrol vapour.

Daimler attached importance to the petrol layer traversed by the air

Digitized by Google

being kept of a constant depth ; he also heated the air before it was delivered inside the apparatus, in order that a constant amount of petrol vapour might be taken up by it both in cold and in hot weather.

Fig. 9 shows the gas-producing device, now generally called a carburettor. A float *k*, provided with a conical opening T in the centre, rests, partly immersed, on the surface of the petrol. The air supply pipe *c* is fitted in the centre of the conical opening, and enters the petrol to a given depth. As the float is always immersed in the petrol to the same extent, the air-pipe always dips down to the same level below the surface, and therefore the air must always flow up through the same height of petrol. The petrol particles which are not vaporised are caught on the baffles *d* and *e*, and fall back to be used later. The wire gauze mantles *m* and *n* serve to protect the inside of the carburettor from back-flashing. The partition *o* separates the upper portion of the apparatus into two compartments. Fresh air enters the top one through the pipe *a*, passes thence down into the apparatus and through the petrol, and the petrol spray and air mixture so formed is supplied to the engine through the pipe *f*, which is connected to the lower part of the upper portion of the apparatus. When the mixture is too rich, extra air may be supplied as desired through the valve *g*.

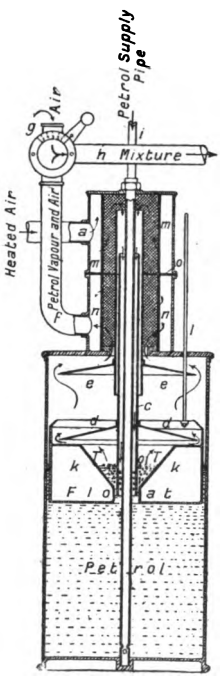

FIG. 9.—The Daimler carburettor.

From figs. 7 and 8 it will be seen that the present type of automobile engine is still very similar to the first Daimler engine. We may mention also, as a special feature, that in Daimler's engine the inlet and exhaust valves were for the first time arranged together in one chamber or valve chest, one valve over the other with the valve heads opposite one another, the arrangement reducing to a minimum the space occupied in former types by the valve casing and passages. The point of ignition was arranged in the space between the two valve heads, where, therefore, the presence of inflammable mixture was assured.

Speed regulation was obtained by periodically opening the exhaust valve, the consequence of which naturally was that no fresh charge was drawn into the cylinder. The centrifugal governor *k*, arranged inside the driving pulley on the flywheel (fig. 7), lifts, whenever the normal speed is exceeded, the rod *g* (fig. 8). This rod operates the "hit and miss" striker pivoted at *f*, pushing it inwards when the valve spindle is raised, and in this way preventing the valve from falling again on to its seat. The exhaust valve is normally worked by the cam *c*, which lifts the tappet rod or spindle ; but when the striker is in action the spindle is not worked by this cam. When, however, the speed falls again to normal the rod *g* is lowered, the striker is

Digitized by Google

tripped, and the exhaust valve resumes its ordinary function, operated by the cam *c*, allowing a fresh charge to be drawn into the cylinder, resulting in an explosion in proper sequence.

We shall often meet with this method of regulation further on. It does not form part of Daimler's invention, but had been worked out several years previously in the Körting Works.

Development of the Paraffin or Oil Engine.

The mineral oil distillates whose boiling points are high, though they are readily volatile substances, which come between heavy petrol spirit with a specific gravity of 0·72 and the mineral lubricating oils, require—as do also the distillates derived from common and brown coal—to be specially heated for atomisation in order to produce a working mixture. The main trouble experienced in the construction of a successful paraffin motor, not as yet satisfactorily overcome, is due to the difficulty of the regulation of the fuel, and of maintaining it at the necessary temperature under all conditions. These heavier hydrocarbons are cheaper than any others on the market, and moreover are of greater calorific value than others. They have the further advantage of low fire risk, and engine builders cannot therefore afford to abandon the task until some simple and safe, and at the same time low-priced paraffin motor is produced.

The nearest approach to a solution of the problem is the Diesel engine, in which the liquid fuel is transformed into a fine spray by air, heated by compression to ignition temperature and instantly burnt.

The Haselwander and Trinkler engines work on a similar principle. In a large number of installations, as, for example, for small factories and for domestic and agricultural purposes, for automobiles and small motor boats, these engines working with compression pressures up to and over 30 atms. (440 lbs. per sq. in.) are not suitable. The failure of all other paraffin motors on the simple petrol motor principle, *i.e.* forming a working mixture and working with low compression, is due to incomplete reduction of the fuel to gaseous form, incomplete combustion, and to the very disagreeable smell given off by the exhaust gases. Most of these engines also require at starting to be heated by lamps, or to be started on petrol. The adoption of these measures, however, increases the risk of fire, and instances in which fires have been caused by the heating lamps and the petrol used for starting are not unknown. Of greater moment, however, is the fact that they are not economical in working, on account of low compression only being permissible with paraffin vapour and air mixture. As stated in the second chapter on "Liquid Fuels as a means for Power Production," these mixtures cannot be compressed to pressures greater than $3\frac{1}{2}$ to 4 atms. (52·6 to 58·8 lbs. per sq. in.), on account of the risk of premature ignition of the charge.

Paraffin has, therefore, a large number of properties which are unfavourable to the engines. Every endeavour must be made, however, to use paraffin and the heavier oils, in simple four-stroke-cycle engines working at

Digitized by Google

pressures of 8 to 10 atms. (117·6 to 147 lbs. per sq. in.), as is now done with engines running on lighting gas. With such engines it will probably be possible to obtain reduction in fuel consumption similar to that obtainable with Diesel engines. While, with a compression of 3½ atms. (52·6 lbs. per sq. in.), 350 to 400 grammes (·77 to ·88 per lb.) of fuel are required per horse-power-hour, when running with compression pressures of 8 to 10 atms. (117·6 to 147 lbs. per sq. in.), the same amount of work should be produced on a consumption of 200 to 250 grammes (·44 to ·55 lb.), and the smell of the exhaust gases would also, in all probability, be greatly diminished.

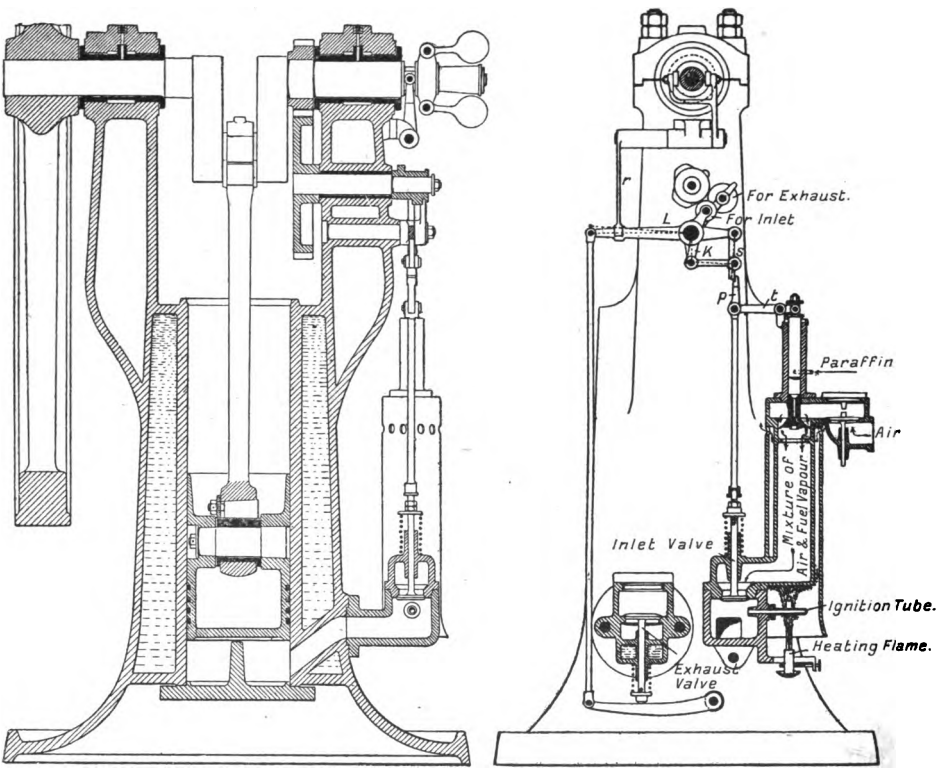

FIGS. 10 and 11.—Kjelsberg paraffin engine.

Among the first mixture-forming paraffin-oil engines which have stood the test of actual practice, may be mentioned the Kjelsberg engine, placed upon the market in 1889 by the Lokomotivfabrik Winterthur.

The Kjelsberg Paraffin Engine of 1889.

This engine is provided with a carburettor taking the form of a heated chamber or cylinder separated from the main cylinder by the inlet valve, the flame kept burning to heat the ignition tube also being utilised to heat the carburettor. Speed is regulated by the Körting governor as described

Digitized by Google

above in connection with the Daimler engine, the exhaust valve being held open periodically, and the inlet valve closed.

As seen in figs. 10 and 11, the valve, all the steering, and the governor mechanism, are mounted at the side of the engine frame. The exhaust valve is shown to the left (fig. 11), and to the right the inlet valve, mechanically operated. The carburettor is placed quite close to the inlet valve seat, and consists of a vertical jacketed cylinder. The exhaust gases from the flame for heating the ignition tube, escape through the jacket and communicate to the wall of the inner cylinder the heat required for vaporisation. A device for atomising the paraffin oil is fitted at the top part of the carburettor, through which is also drawn the air necessary to complete combustion. The paraffin spray is directed on to the heated surface of the wall of the carburettor, where it is evaporated, immediately forming the inflammable charge.

The inlet valve and the paraffin cut-off disc valve, are worked together by the same cams, through the link *s* and the striker *p*. In front of the carburettor there is also an automatic air inlet valve, provided in order to prevent any small amount of paraffin vapour remaining in the carburettor from entering the engine. When the normal speed is exceeded, the centrifugal governor pushes over the bent lever *r* above the exhaust lever L, raising L and thereby holding the exhaust valve off its seat. To lever L is fitted an arm K, which, on any movement of the exhaust valve, draws the link *s* to the left, out of the way of the "hit and miss" rod *p*, of the inlet valve. Thus, while L is held up by the lever *r*, the inlet valve and the paraffin supply remain closed, and no charge is taken into the cylinder until the governor has again freed the lever L.

The Capitaine Paraffin Engine.

Among the first engines in which the vaporising apparatus and the ignition tube were combined, the Capitaine paraffin engine should be mentioned. To this day this engine has remained practically unaltered. It is built by the Maschinenbau-Aktiengesellschaft, formerly Ph. Swidersky of Leipzig-Plagwitz. This engine is illustrated in figs. 12 to 15. Fig. 14 shows the combined carburettor and ignition tube. This fitting consists of the comparatively small conical tube F. The paraffin heating lamp, provided for heating the carburettor ignition tube, is marked G; the ribs *c* on the outside of the vaporising chamber are intended to increase the heat-absorbing surface, and also to give it additional strength.

Before the suction stroke commences, the quantity of paraffin required for the charge has been stored by the pump *x* in the space in front of the valve *e*. When suction commences, air is drawn through the port *e'*, lifts the valve *e* off its seat, and blows the paraffin through into the vaporising chamber. Here, on coming into contact with the heated surfaces, the paraffin spray is evaporated, and in the shape of a highly inflammable mixture, formed of paraffin and of the small amount of air which served to atomise it, it passes through the port *f* (fig. 14), and mixes with the air needed for

LIBRARY OF THE UNIVERSITY
Digitized by Google

combustion drawn in at E. From the shape and location of the carburettor it is evident that this apparatus will also perform the function of igniting the charge.

The valve gear, etc., in this engine, is unnecessarily complicated and inaccessible. It has been greatly simplified in the Company's later models. In fig. 13, *g* is the exhaust cam; on this runs the roller *i*, carried at the extremity of the lever *e*, which operates the exhaust valve spindle. The cam *n* works the paraffin pump *x*, lifting the roller *m* and with it the crank

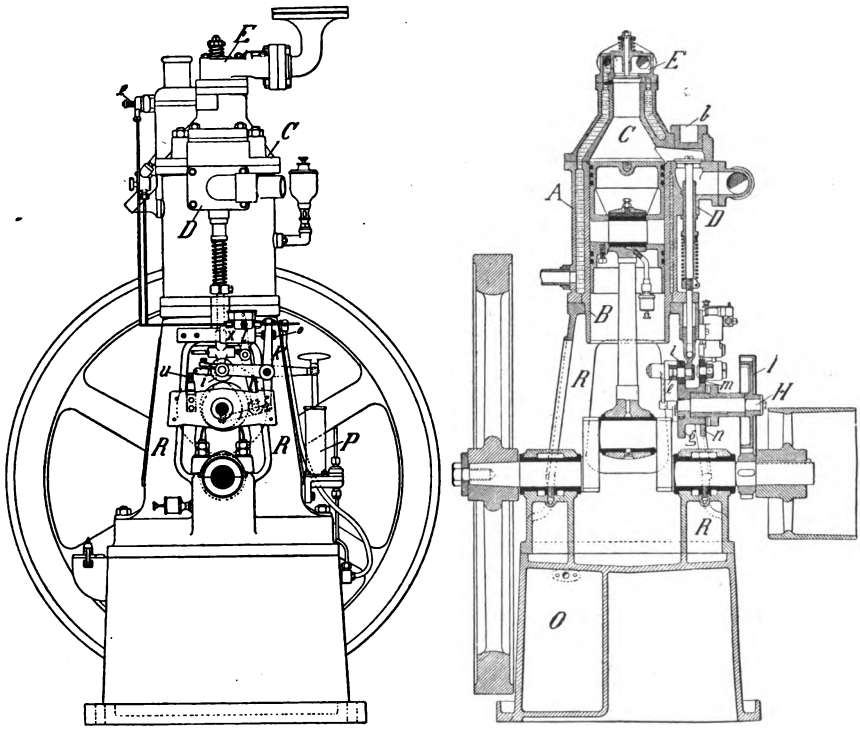

FIGS. 12 and 13.—The Capitaine paraffin engine.

lever *kk'* (figs. 12 and 15). The lever *k'* works in a slot cut in the pump piston *o*, working it backwards and forwards as the roller is lifted or allowed to fall by the action of the cam *n*. At another point in its revolution the cam *n* comes into contact with the lever *l*, which works the disc valve of the oil pump.

The engine is governed in the same way as the Kjelsberg paraffin engine. The exhaust valve is occasionally held open, air suction and the drawing in of a fresh paraffin charge being temporarily prevented, until the speed falls to such an extent that explosions again become necessary. The counter-weight K in the governor (fig. 15) is swung out by centrifugal force, when the speed exceeds the normal limit. When in this position, it strikes, by

Digitized by Google

means of the wedge plate r, the roller s carried by the bell crank s', imparting motion to the lever t. The lever t is fitted with a pin u, and when the

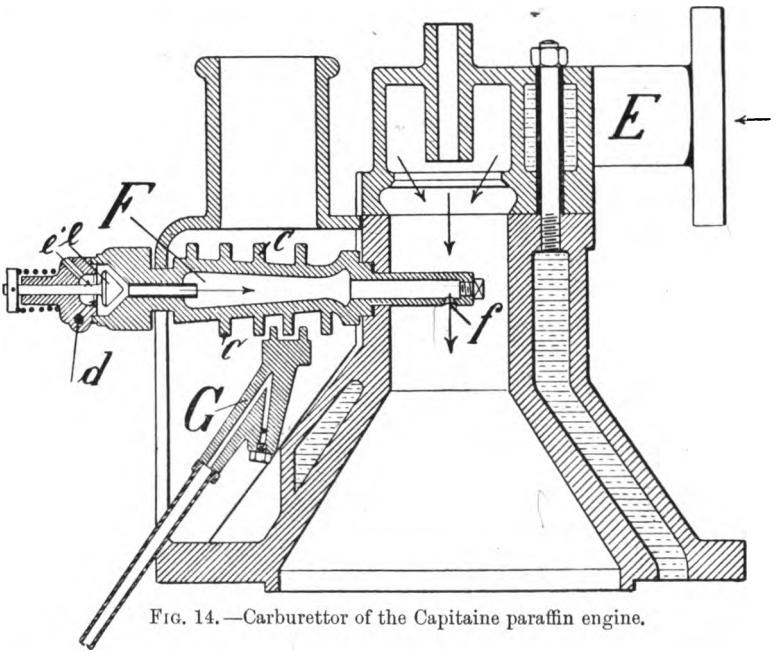

FIG. 14.—Carburettor of the Capitaine paraffin engine.

weight K is swung out, this pin is pushed in under the end of the exhaust valve lever raised by the cam g. The exhaust valve is thus prevented from returning to its seat, and at the same time the paraffin pump is also thrown out of gear. But while held open in this way, the exhaust valve, during the actual period of exhaust, is raised by the cam g so that the lever e is lifted off the pin u of the lever t, and this, being for an instant unloaded, is allowed to swing back as soon as the governor weight K moves in towards the centre, on the speed falling. The exhaust valve and the oil pump can then resume their proper functions, and the charging is carried out regularly. In order that a regular quantity of paraffin may always be supplied to the engine, and in order that the heating lamp may always burn with the same sized flame, it is necessary for the paraffin to be supplied to both, under a uniform pressure. A high level for the paraffin tank has not been found necessary, and a portion of the space in the engine

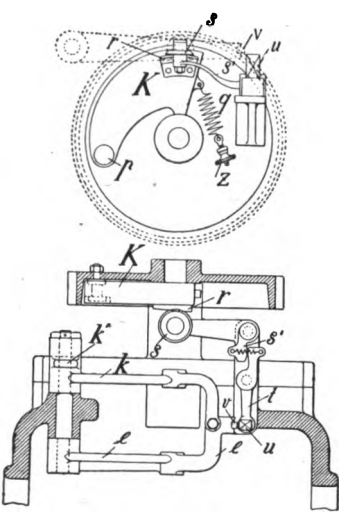

FIG. 15.—Governor of the Capitaine paraffin engine.

Digitized by Google

bed plate is utilised for storing the liquid fuel. This fuel supply is kept under an unvarying pressure by means of an air-pump P (fig. 12), driven by the engine. This pump can be thrown out of gear, and when the engine is not running it can be started by hand in order to provide the pressure needed by the heating lamp for starting.

Paraffin Engine on the Hornsby-Akroyd System.

Another typical paraffin engine system is that due to the English engineer Akroyd, which dates from 1890. In this system the formation of a mixture does not take place during the suction stroke, but during the period of compression. The oil, for the time being separated from the air of combustion, is sprayed into a heated chamber filled with the gases of combustion remaining from the former working stroke. In this chamber there is formed, during the suction period, a non-inflammable mixture of paraffin vapour with products of combustion, and only the air required for combustion is drawn into the working cylinder.

The vaporising chamber in question communicates with the working cylinder simply by means of a comparatively small port, so that only a very small portion of its contents enter the working cylinder during the suction stroke. During the subsequent period of compression, air from the working cylinder is added to the paraffin vapours, and in this way the actual explosive mixture is made. When compression ceases and all the air has been driven into the vaporiser, there is there an inflammable mixture which ignites automatically at the right moment from contact with the heated walls of the vaporiser. In the other systems above described, the working mixture is formed during the suction stroke, and consequently the paraffin vapours come into contact with the cooled cylinder walls. This is a distinct disadvantage. It will be remembered that paraffin vapours remain as such at low temperatures in the form of inflammable mist, only so long as they do not come into contact with cold solids. The cylinder walls of engines must, however, be kept as cold as possible in order to obtain good mechanical results and satisfactory lubrication. All paraffin vapour which comes in contact with the cylinder walls is liquefied, and is thus removed from the mixture and not consumed. The liquid paraffin becomes mixed, partly with the lubricating oil, and, on account of the high temperature of the gases of combustion, is in part re-evaporated during the following working period, but cannot be efficiently burnt because there is no air in the cylinder for its combustion. This portion of paraffin is, therefore, not utilised, and it is discharged with the exhaust gases. The temperature of the interior surface of the cylinder walls rises with each explosion, for the cooling effect of the water is not instantaneous. A part of the paraffin dissolved in the lubricating oil is also re-evaporated, when the piston drives out the products of combustion and leaves part of the cylinder walls exposed. The paraffin thus vaporised passes into the engine room, the air of which may become so vitiated that the attendant is unable to remain in it.

Digitized by Google

The Akroyd engine as now built by the Aktieselskabet Frederikshavns Jernstoberi & Maskinfabrik, is illustrated in figs. 16 and 17. The working cylinder is shown at A; H is the air-inlet valve, I the exhaust valve, B the vaporiser and combustion chamber. Paraffin is sprayed into the vaporiser by the small pump, shown in detail in fig. 17, through the pipe F, during the

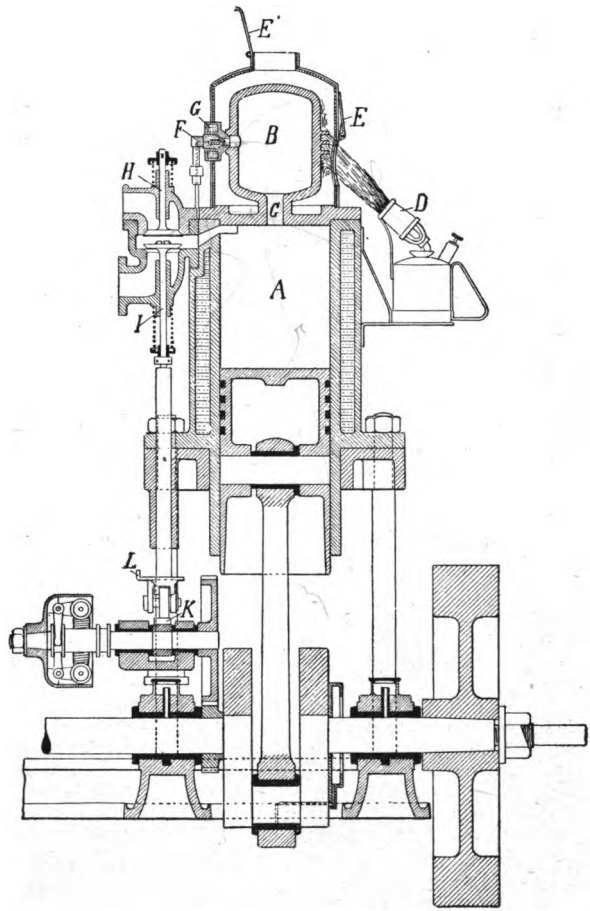

FIG. 16.—Paraffin engine Akroyd system.

suction-stroke. The inlet mounting G is provided with a special water cooling arrangement, so that during the compression, working, and exhaust strokes, the high temperature of the vaporiser is not transmitted to the paraffin in the pipe, causing it to evaporate too soon. The engine is governed in a very simple way, by regulating the quantity of paraffin supplied. Should the engine run too fast, the governor opens a by-pass from which a part of the oil supplied by the pump (fig. 17) runs back to the oil-tank. The vaporiser is surrounded by a cover, in which is cut an opening E, and

Digitized by Google

through which the heating flame is directed, and an opening E^1 provided for the escape of the hot gases. Both openings are provided with damper doors, which must be closed when the engine has to work for a long time at small load, or stops running for a short time.

The Akroyd patent is chiefly concerned with the port between the vaporiser and the working cylinder, and with the flap-valves for regulating the temperature of the former. The patent was taken out on 7th December 1890, and is therefore no longer valid in Germany.

The engine was first built by Hornsby & Sons, England, and has been largely adopted in Sweden, Norway, Denmark, and Russia. It is also built in Germany on the two-stroke-cycle principle, and provided with water jet. Under the latter conditions higher degrees of compression are possible, resulting in more economical working.

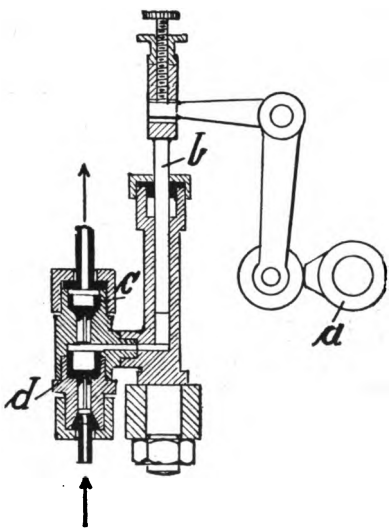

FIG. 17.—Paraffin pump of the Akroyd engine.

The drawbacks to the Akroyd system are that the engine only works satisfactorily when the vaporiser is just kept at the right temperature. The surface, volume, and the ventilation of the vaporiser chamber must be so proportioned that the highest permissible temperature will not be exceeded by continuous working at full power; while on the other hand, the ignition temperature must be kept up in spite of a decrease of the power developed, within the widest limits possible.

The Akroyd engine cannot run for long under no load, or stand for long not working. In either case re-heating with the lamp is necessary in order to make the engine run satisfactorily.

Too high a temperature of the vaporiser or combustion chamber has a very unfavourable effect on the power developed by this and other paraffin engines, for "fat gas" is formed and the time of ignition retarded. It is even possible for the power in such cases to be reduced by as much as 40 per cent. Although these drawbacks are serious, the Akroyd system has the very distinct advantages of simplicity in construction and reliability in action. For installations in which the engine is kept running for a long time with steady load, not far short of its maximum, as in small sea-fishing craft and small corn-grinding mills, this type of engine will be found thoroughly reliable. There are thousands of fishing boats fitted with these engines in Sweden and Denmark, while they are used in Russia for driving small grinding mills. In the latter country the fuel used is the very cheap crude oil.

Digitized by Google

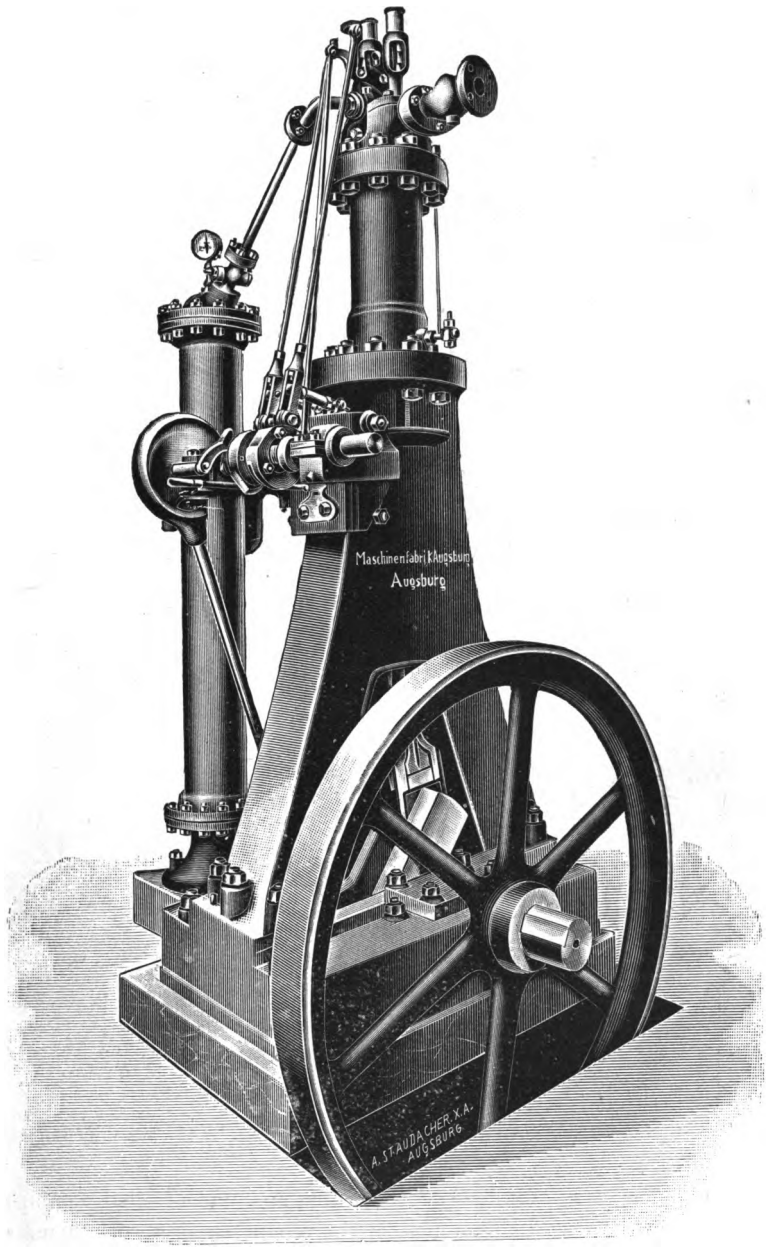

FIG. 18.—First Diesel experimental engine, built in 1894, by the Maschinenfabrik Augsburg.

Digitized by Google

The Diesel Engine.

The most important paraffin motor at the present time is the Diesel engine.

While in the systems already considered the charge is taken into the

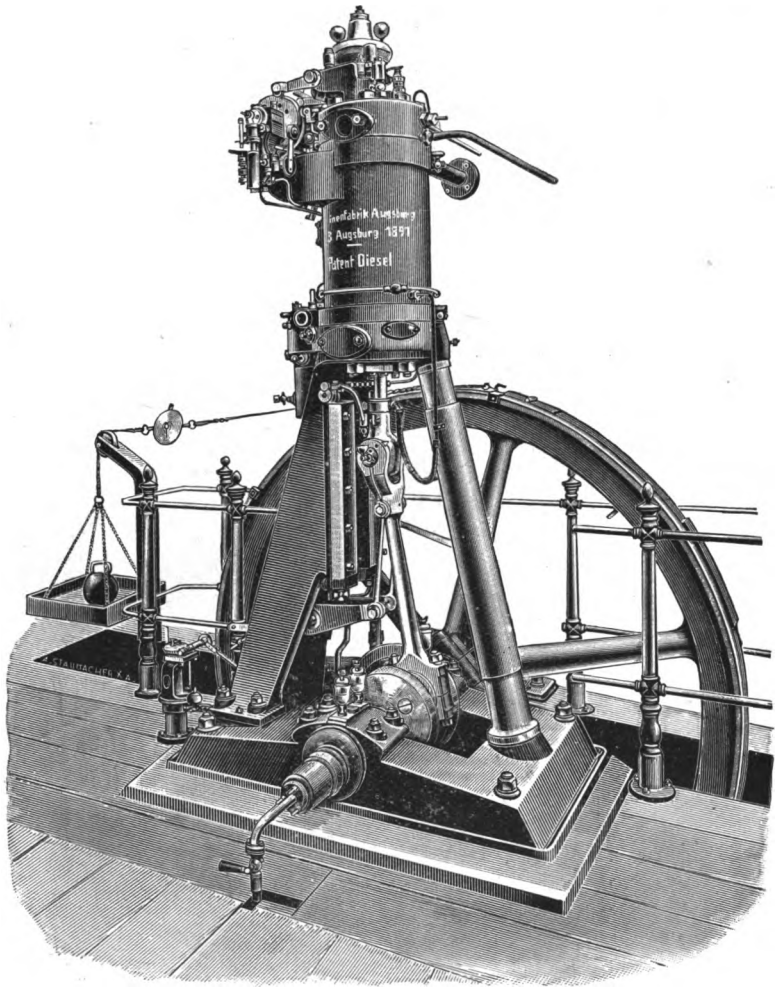

FIG. 19.—Second Diesel experimental engine, built in 1897, by the Maschinenfabrik Augsburg.

working cylinder in a form ready for ignition, and uncontrolled combustion is permitted, in the Diesel engine neither the production of a working mixture nor the introduction of the charge in this form into the working cylinder occurs, the air for combustion alone being drawn into the cylinder. By high compression this air is raised to ignition temperature. At the end of the in-stroke, when compression has reached its maximum, the necessary fuel is intro-

Digitized by Google

duced as a fine spray under a still greater pressure than that of the air inside the working cylinder. The duration of the spray and the quantity of fuel injected are regulated according to the power required, combustion lasting for either a long or short period, as a consequence. The separate particles of fuel are consumed the very moment they come in contact with the air necessary for their combustion. In the other systems, uncontrolled combustion may be said to take place; in the Diesel engine it is under positive control.

Many difficulties were at first met with in the use of the Diesel system, but owing to the untiring efforts of the Maschinenfabrik Augsburg, all these have been surmounted, and now this engine, at least so far as the larger sizes are concerned, is not only reckoned to rank as one of the most reliable, but also as among the most economical and the quietest in running.

Figs. 18 and 19 show two phases of its development. Fig. 18 illustrates the first experimental engine as it was built in 1894 by the Maschinenfabrik Augsburg. As will be seen, the working cylinder is not water-jacketed.

Fig. 19 illustrates the form the engine took in 1897, which resembles rather more closely the type now in use. Sections of these engines were not obtainable, but detailed working drawings of the latest types of Diesel engines are given in a later chapter.

Digitized by Google

CHAPTER IV.

THE WORKING OF THE LATER PARAFFIN AND PETROL ENGINES: THEIR CONSTRUCTION AND COMPONENT PARTS.

(a.) The Working of Paraffin and Petrol Engines.

It may be said that the number of ways and means of working possible with internal combustion engines, is unlimited. Reference to the lists of patents will show that almost half the patents taken out are concerned with new methods of working; the number of these which have been used and have stood the test of actual practice is, comparatively, a very small one.

There is scarcely any other branch of engine construction in which the most correct and most promising schemes, from a theoretical point of view, have met with so many difficulties and have proved of so little real value on actual application, as has been the case in the construction of internal combustion engines. It will be understood, therefore, that for all engines, whether driven by gaseous or liquid fuel, the simple four-stroke-cycle principle, as used in the first Otto compression gas engine, still holds its position as the most generally adopted system of working.

The four-stroke-cycle is one in which the suction and compression of the charge, the performance of work and the discharge of the gases of combustion, take place in and from the same cylinder. It would unquestionably have been greatly preferable, from a purely theoretical standpoint, to cause the actual work and the compression to be done by mechanism strongly designed for this work, and the easier work of suction and exhaust by other and lighter mechanical parts, instead of making one set of mechanism perform the double function, when two instead of four strokes would be required of each set of mechanism for each operation. This idea is always being advanced, and can be traced back to the earliest gas engines; this corresponds with the simple and double-acting two-stroke-cycle principle. Theoretically, the two-stroke-cycle engine for equal dimensions of the working cylinder, working at the same speed, should develop twice the power of the four-stroke-cycle engine. Experience shows, however, that the gain in work expected of smaller engines up to about 150 h.-p. is by no means realised in practice, as the fuel is utilised under much less favourable conditions than in the four-stroke-cycle; and in reliability of working, these engines are less satisfactory than those

Digitized by Google

working on the four-stroke-cycle. The two-stroke-cycle engine for small powers, with separate mixture pump, as embodied in the design of the Wittig & Hees engine described in the third chapter, has never found general favour on the market.

Conditions are more favourable in the two-stroke-cycle engines, in which the front end of the cylinder is used as a charging pump. These engines show the best results in the smaller sizes. A saving in work of 50 to 60 per cent. is effected with equal-sized cylinders in these engines, over those running on the four-stroke-cycle principle; design and construction can be kept down to comparatively simple lines, and fuel consumption will compare well with that of the four-stroke-cycle engine. But whether it can compare with the four-stroke-cycle in the matter of range of work, is a point on which there is, as yet, no clear evidence. As a type of so-called valveless two-stroke-cycle motors, the "Söhnlein" engine may be mentioned. This is described later in this work. It is built by the Motorengesellschaft "Solos," Wiesbaden.

(b.) The Construction of Paraffin and Petrol Engines.

In the construction of an engine the position of the working cylinder is the controlling factor in the design, and the engine is called horizontal, vertical, or inclined, according to its cylinder arrangement.

The horizontal position facilitates access, supervision, and attendance. This should be generally adopted in all installations where the engine is used for stationary factory work, and the highest reliability in operation and long runs without a stop are necessary. The chief drawback in this arrangement is that it requires a large amount of floor space.

As liquid fuel is not much used for factory driving purposes, the horizontal type of engine is but seldom met with.

The proper field for petrol and paraffin engines is really to be found where questions of movement or portability are involved, in vehicles and boats and portable power machines. In this field it holds the first place, because this type of engine occupies but little space and is of the least possible weight; its moving parts are protected from dust, and it needs the least attendance of all engines. These conditions can be best fulfilled by the vertical or inclined types.

In vertical engines, the crankshaft can be placed above or below the cylinders; in order to improve the stability and quiet running of the engine it is, however, always placed underneath in the case of motors for vehicles. The practice of placing the crankshafts at the top was very popular for factory engines in the 'eighties, and although the arrangement presented many advantages on account of easy lubrication of the piston, convenient pipe-connections and belt arrangement, it is practically never adopted at the present day.

There are, however, disadvantages in the vertical type of construction, such as difficulty of arranging the valves satisfactorily and of devising simple valve-gear, etc. Further, it is very sensitive to bad adjustment of the crank-

Digitized by Google

shaft. This lack of truth of the shaft occurs in course of years in almost all engines, and is due to the fact that the power is always transmitted to it when the cranks are on one side of the centre line, or else to the fact that there is the weight of the flywheel on one side only. The crank in the end revolves in a plane inclined to the axis of the cylinder, forcing the connecting rod, and with it the piston, first towards one side and then towards the other. The engine runs harder as time goes on, and wears rapidly. In horizontal engines this want of alignment caused by wear of the crankshaft has not such an unfavourable influence, because the piston, by a slight twist in the cylinder, can adjust itself to the altered position of the crank.

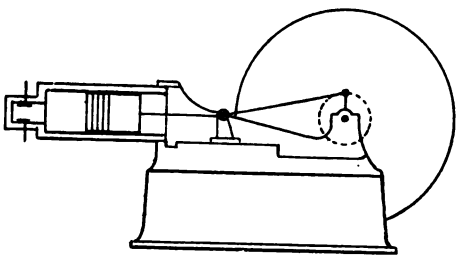

FIG. 20.—Horizontal type with crosshead guide.

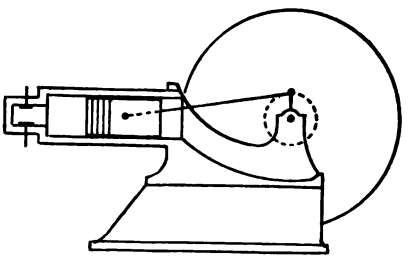

FIG. 21.—Horizontal trunk piston type.

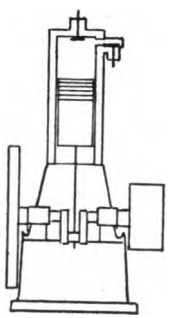

FIG. 22.—Vertical type with crankshaft below.

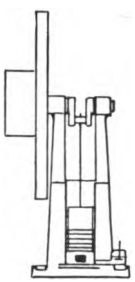

FIG. 23.—Vertical type with crankshaft above.

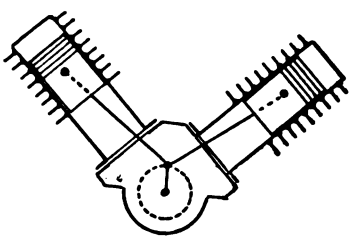

FIG. 24.—Inclined type with crankshaft below.

For a vertical engine to continue running easily for a long period, both crankshaft bearings have to be equally loaded; it should have on both sides of the crank flywheels of equal weight.

The inclined type for one-cylinder engines is seldom used. The type, however, has advantages when it is desirable to have two or more cylinders working on to the same crank. The large ends of the connecting rods are arranged one beside the other, the crank being lengthened in order to accommodate them. In most cases a common lay-shaft can be used. Engines of this type are used for automobiles, racing boats, and air-ships; in racing boats there are as many as twelve cylinders mounted in pairs set behind one another ("Antoinette" motor).

Digitized by Google

The type of engine with two horizontal cylinders arranged opposite to each other, with connecting rods working on to the same crank-pin, has not met with much success in actual practice, because in the case of one cylinder the working-stroke occurs when the crank is moving over from left to right, and with the other, when the crank is moving from right to left. In the first case the thrust is all on the bottom of the left-hand cylinder, and in the second on the top of the bore of the right-hand cylinder. Owing to this difference the cylinders wear out very rapidly. Figs. 20 to 24 show diagrammatically the types now in use.

(c.) Component parts of Paraffin and Petrol Engines.

The Engine Frame and Crank Chamber.—In horizontal stationary engines, the engine frame forms the body to which all the other main parts, such as the working cylinder, the crankshaft bearings, the lay-shaft, etc., are fitted. In automobile and other similar engines, it is also made use of as a dust-proof casing to protect the mechanical parts, when it is known as the crank case or chamber.

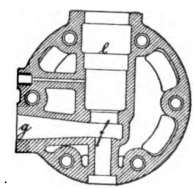

In deciding upon the design of the bed plate or frame, and crank chamber, care must be taken to ensure the pro-

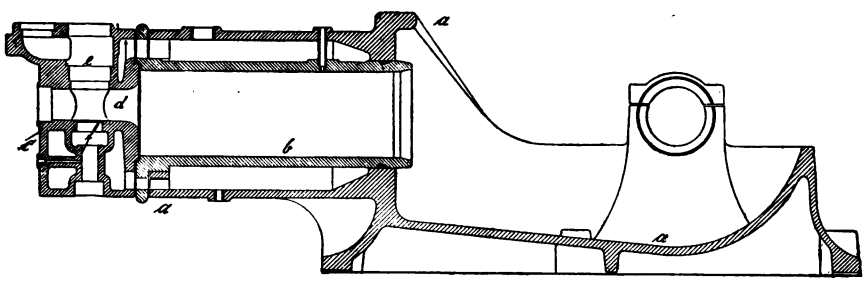

FIGS. 25 and 26.—Horizontal engine frame, with cylinder liner.

vision of a broad bearing on the foundations, in order to prevent twisting and distortion when being bolted down fast. In all stationary engines, in the best practice, the frame, water-jacket, and crankshaft bearings form one casting, on which are also cast all the flanges required for the fitting on of all the other parts. In automobile engines, the crank case and water-jacket are not continued in one casting, and for these aluminium bronze is used, an alloy which, notwithstanding its small specific gravity, 2·8 to 3, is much stronger than cast-iron.

All well-equipped engine-works should possess a special machine-tool for machining the engine frame, in which this part of the engine can be completely finished, without moving it when once it is set up on the machine.

The Working Cylinder.—The most important matter in the construction of an engine intended to be both economical in working and durable, is to

Digitized by Google

make the working cylinder of the most suitable material, namely, of close-grained, hard grey cast-iron, and the piston of the same material. The bore should be accurately cylindrical, and should show a perfect surface; there should not be any blow-holes or porous places indicative of a spongy texture of the iron.

Since a uniformly close-grained casting can only be obtained when the cylinder is in a simple and regular design, uniform in thickness as far as is practicable, it has long been customary in the case of stationary engines to cast the cylinder separately and not in one piece with the water-jacket, and apart from the frame or crank case. The cylinder liner is then fitted tightly inside the water-jacket, and the outside end is covered by a third casting forming the combustion chamber and valve chest. Figs. 25 to 27 show typical engine frames fitted with cylinder liners, for horizontal and vertical engines. In a subsequent chapter, when describing automobile engines, their form of crank chamber will be clearly seen from the illustrations then given.

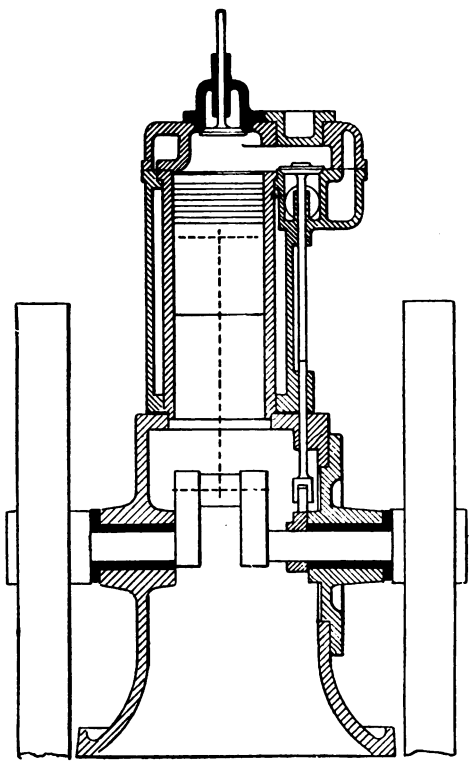

FIG. 27.—Vertical engine frame, with cylinder liner.

The cylinder liner becomes, of course, much hotter than the water-jacket, and provision must be made for the former to expand freely in the jacket, the joint being kept tight by indiarubber packing or a suitable stuffing-box.

The combustion chamber, which is usually cast in one piece with the valve chest, is exposed to the greatest pressures and highest temperatures. In paraffin and petrol engines, which work with compressions up to 5 atms. (73·5 lbs. per sq. in.), pressures rising as high as 20 to 24 atms. (294 to 353 lbs. per sq. in.) have to be taken into account, and the walls of the combustion chamber must be made of suitable strength.

In the older stationary engines using liquid fuel, the combustion chamber practically formed part of the walls of the working cylinder, and was of the same diameter; now, however, the combustion chamber is given a somewhat smaller diameter and greater length, room being thus procured for a more convenient arrangement of the valves, while useless passages and spaces are

Digitized by Google

done away with. The valve heads are thus inserted in the actual walls of the combustion chamber, and by this means is procured a larger volume with comparatively small cooling surface. Ignition can take place very rapidly throughout this space; a small portion of the heat developed is absorbed by the walls, but the greater amount is transformed into work.

It is preferable to make the diameter of the combustion chamber equal to its length; the inlet valve is at the top and the exhaust valve on the underneath side. After removing the inlet valve cover, the mushroom head of the exhaust valve can easily be taken out and the seating inspected.

In vertical engines this arrangement of the valves cannot be used. The side-walls of the combustion chamber in these engines are vertical, and the valves would have to work horizontally. Horizontal valves, however, are in all cases objectionable, especially in motors, as they do not remain tight. In order to obtain a vertical arrangement of the valves, therefore, their location in the top of the combustion chamber is the only one possible; but this again, even if it be of the same diameter as the cylinder, does not always provide sufficient room for two valves. So long as one has to deal with slow-running stationary engines, the valves are comparatively small, and can be placed, if need be, one beside the other. In high-speed automobile engines, the valves must be of comparatively large diameter, and the area of the top is not sufficient to accommodate, conveniently, both valves. In such cases the inlet and exhaust valves are usually found in one chamber on one side, or else are placed one on either side of the cylinder.

In vertical stationary engines, not employing mechanically operated inlet valves, these valves are occasionally placed in the centre of the cover, while the exhaust valves are at the side so that they can be worked direct by a rod, without intermediate links or levers as shown in fig. 27.

Up to the middle of the 'nineties there were a great many varieties of paraffin and petrol engines so far as outside shape was concerned. The designs have, however, approached gradually to uniformity, except in the case of automobile engines where new and special forms and arrangements are still occasionally met with, which, however, as a rule, do not enjoy a very long life.

The Piston.—Next in importance to the cylinder is the piston of the engine. It is subject to very high temperatures, and is only partially cooled by the entering charge which comes in contact with its inner surface. When working, it only partially comes into contact with the air. Consequently, the end of the piston expands much more than the working cylinder, and for this reason, the piston in the first place is turned to a somewhat smaller diameter, so that when heated and expanded it exactly fills the cylinder cross-section.

The arrangement of separate crosshead guides beyond the cylinder, by which all side-thrust is taken up in a manner independent of the cylinder, is now being more and more largely abandoned; it greatly increases the cost of the engine. The Gasmotorenfabrik Deutz alone are still supplying this type when specially desired. In all other instances the cylinder and piston have not only to remain tight, but also must absorb all side-thrust. A great

Digitized by Google

length or bearing surface for the piston in these engines is also of the greatest importance, and the working life of an engine can be gauged beforehand by the length of the piston. The Gasmotorenfabrik Deutz give their pistons a length equal to $2\frac{1}{4}$ times their diameter.

The Piston Gudgeon Pin.—As already stated, only a few firms now build engines with separate crosshead guides. Competition enforces the adoption of

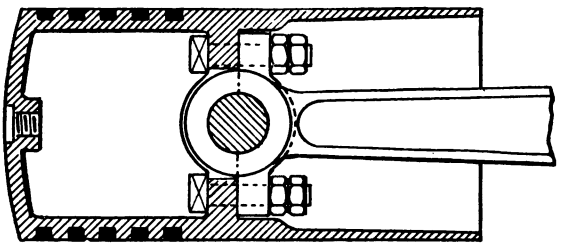

FIG. 28.—Piston with movable gudgeon.

cheaper designs, and turns the scales in this as in other matters, notwithstanding the fact that the gudgeon in the trunk piston is, so far as durability is concerned, the weakest point in these engines. Wear, in this case, takes place very rapidly, because the gudgeon becomes very hot, because it is very inaccessible, and its proper lubrication is very difficult, and lastly, because space is restricted and it cannot be made really large and strong enough. Figs. 28 and 29 show the different forms of gudgeon pins in trunk pistons.

In automobile engines, the pistons are made very short in order to reduce

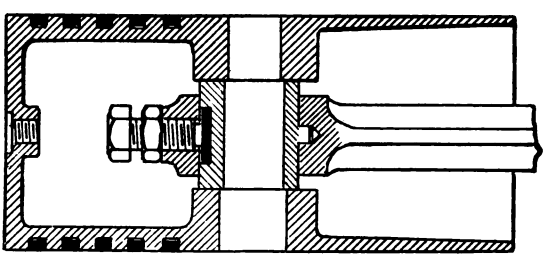

FIG. 29.—Piston with fixed gudgeon.

as much as possible the height and weight of the cylinders, and much attention is seldom paid to the design of gudgeon. It consists usually of a simple cylindrical steel pin, the small end of the connecting rod being fitted with a corresponding steel bush. Since, in automobile engines, all the revolving reciprocating parts inside the crank chamber are splash lubricated, there is less risk of inefficiency of lubrication in these engines than in others. Nevertheless, even in these the gudgeon pin is always the part which wears the quickest.

The Piston Rings.—These are also very important parts of an engine. They must act as an elastic wall, and must be able to take up the wear for a

Digitized by Google

long period; nevertheless, when tight, the pressure they exert inside the cylinder must not be too great, or they would act as a brake and would greatly increase the internal resistance of the engine.

Piston rings are now generally made of cast-iron; until the early 'eighties they were made of steel, but cast-iron is sufficiently elastic and the coefficient of friction of cast-iron on cast-iron, at the high temperatures which obtain in engines, is less than that of steel on cast-iron.

The spring required is obtained in the following manner:—The complete ring is given a somewhat larger diameter than that of the piston; a piece is then cut out of it, the two ends are brought together, and the ring thus formed is turned afresh, exactly to the cylinder diameter. The completed rings are fitted in place by hand, care being taken not to bend them. The

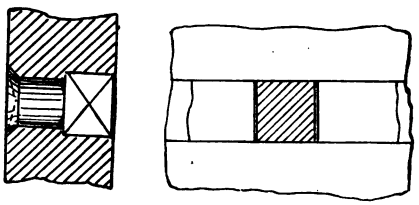

FIG. 30.—Piston ring stud of the Gasmotorenfabrik Deutz.

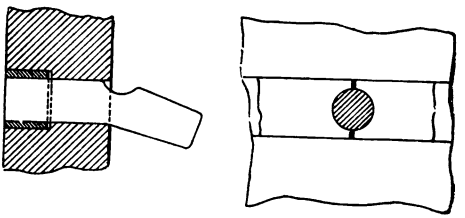

FIG. 31.—Tangyes piston ring stud.

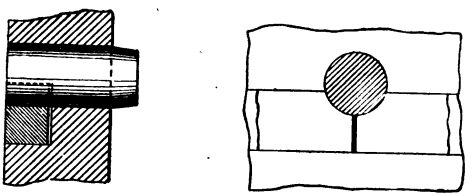

FIG. 32.—Piston ring stud of the Verdau Motorenfabrik.

safest proof that the rings are fitting satisfactorily is obtained on inspection, after working for a time, when, if wearing properly, they will be found to be polished evenly over the whole of their periphery. When isolated polished parts appear, this is a sign that the rings have too large a diameter and that they bend unevenly on every in-and-out stroke. Rings that are too stiff wear rapidly, break easily, require more lubrication, besides enlarging their grooves. The rings are tight only when there is a certain amount of play between them and the bottom of the grooves in the piston. Cleaning, in the case of the piston, is limited to the removal of thick and burnt lubricating oil from these grooves. If the rings are not prevented from working round, after a few hours' running, all the slits would come into line which would, of course, allow the working gases to escape. Care must therefore be taken to keep them in place so that the slits break joint. This is done by means of a stud or feather in the groove.

The studs must be most carefully fitted in the bottom of the groove.

Digitized by Google

Simply screwing in small round studs is not sufficient; such studs, owing to the constant variation in direction of pressure, would become loose, resulting in the cutting of longitudinal grooves in the cylinder bore. It will always be noticed that, in well-built engines, the greatest care has been given to the question of safely fixing the piston ring studs. The Gasmotorenfabrik Deutz, for instance, rivet in a square stud which takes up the whole width of the groove (fig. 30). Messrs Tangyes, Birmingham, use a round and slightly conical stud, which is let in deeply and secured by being bent over in the piston (fig. 31). Other builders use a round stud of diameter larger than the width of the groove, but projecting only half-way across the latter, securing in this manner a firm hold in the thick part of the piston wall (fig. 32).

Valves.—The valves permit of the introduction of the charge and the discharge of the burnt gases; they must be able to withstand the high pressures and temperatures of the combustion chamber, and must always be in working order in spite of these unfavourable conditions. The greatest tax is put upon the exhaust valve.

The mushroom valve has been found to be most suitable both for the inlet and the exhaust. This is shown in fig. 33; both the valves are made of medium hard quality steel.

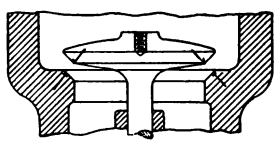

Fig. 33.—Valve.

Piston valves, double-beat valves, and other types used in steam engines, are not suitable for internal combustion engines; they may only be used in connection with the formation of the explosive mixture and for governing; in places, in fact, where they are not directly in contact with the high temperatures of combustion and with high pressures. The inlet and exhaust valves are always arranged vertically, never horizontally or inclined; their spindles or stems should be made as long as possible, and the guide should run close up to the head of the valve. Special care must be given to the design of the operating mechanism, and the slightest side-thrust against the spindle guide must be avoided, especially in the case of the exhaust valve. It must not be overlooked that the valve spindle is exposed to temperatures at which oil lubrication is impossible. Easy and quick removal of the valve for inspection and regrinding or fitting, is a point to be carefully studied in design.

With mechanically operated valves a sufficiently large passage must be provided for the gases to flow in and out freely; the flow through the opening shown in fig. 33 should have a mean velocity of 20 to 30 ms. (65 to 98 ft.) per second. In large engines this velocity should be rather larger, and in smaller ones it should be less than the mean. The lift of the valve should be kept as small as possible. The cams for opening the valves should be so shaped as to be suitable for a certain range, either increase or decrease, in piston speed, and therefore for the corresponding variations in the velocity of flow of the gases through the valve passages. In designing the valve chamber,

Digitized by Google

sharp bends, corners, narrow passages, and abrupt changes of cross-sections should be avoided.

As the products of combustion at high temperature flow past the exhaust valve, non-cooled exhaust valve chambers are only possible on very small engines. The combustion gases are rust-producing, and the exhaust valve spindle after the cylinder has been standing for any considerable length of time, is frequently stuck fast; a lubricating device must therefore be provided for the spindle. Oil, however, cannot be used for this, since it is liable to become carbonised on account of the high temperature of the valve; this would, of course, interfere with the proper working of the valve. Paraffin must therefore be used, for this evaporates completely and possesses, moreover, the property of dissolving the rust and also the coagulated lubricating oil which finds its way from the working cylinder to the exhaust valve guide.

In small engines the inlet valve should also be mechanically operated. When self-acting inlet valves are used, the maximum amount of power theoretically possible with the available cylinder volume cannot be developed. The valves also vibrate in working, and cause trouble from noise.

The Supply and Mixture of the Fuel.

The difference in construction between paraffin oil and petrol or gasolene engines is, as a rule, not great; it results from the fact that the fuels used for paraffin and oil, in distinction to petrol engines, do not vaporise at the normal air temperatures, and means must be taken to produce artificially before starting, a temperature sufficiently great to cause vaporisation, and also to maintain this temperature all the time the engine is running. Speaking generally, although distillates of crude petroleum and of mineral coal, both of high and of low boiling points, are obtained, they have all approximately the same liquidity and no very great difference in calorific value, so that the same mechanical devices may be used in both paraffin and petrol engines. There is no difficulty in building, supposing the necessary heating arrangements to be provided, an engine which can run with all kinds of fuel. The amount required of any of the various fuels also differs but little.

It may be assumed that the petroleum distillate of specific gravity 0·72 forms approximately the limit at which natural vaporisation occurs, so as to yield, at the normal temperature of the air, an inflammable mixture. With the heavier distillates, heating devices become necessary. Paraffin engines are now grouped in two classes, namely, those in which the heating is external and those in which it is internal. For external heating, lamps are used, either just at starting and sufficiently long afterwards for the vaporisation temperature to have been reached internally, or kept burning all the while the engine is working, in order to heat a certain part specially designed for this purpose.

If it is not desired to use a lamp, the engine is started on a light fuel—gasolene, for example, which gradually raises the internal temperature to the point required, after which paraffin oil is supplied, and the

Digitized by Google

supply of lighter fuel cut off. The change from one fuel to the other is not noticeable.

We therefore have to deal with:—

1. The supply and mixture of light fuels.
2. That of heavy fuels—

   (*a.*) employing external heating by lamps;
   (*b.*) using heating only at starting;
   (*c.*) starting on light fuel until the internal temperature necessary for the heavier fuels is reached.

Carburettors for Light Fuels.

In the case of all light fuels, their property of vaporising at the normal temperature of the air suffices for the formation of inflammable mixtures. The engines run on these fuels are really true petrol engines, and are ready for starting up practically without preparation. As stated in the chapter dealing with their development, contrivances for producing lighting gas from easily volatilised hydrocarbons were brought out in the late 'sixties, with which gas-engines could easily be run. These air-gas-, or gasolene-gas-making devices were filled with a large quantity of petrol or some other suitable fuel, air being then driven through them. The air became saturated with the fuel vapours, and formed a combustible gas which could be supplied to any distance, through pipes, in a similar way to coal gas. A similar apparatus, which could hardly be of greater simplicity of construction, was in use up to about the year 1900 for supplying the fuel and mixture in almost all petrol engines. The only disadvantage of this apparatus, or carburettor, was that the whole of the fuel to the very last portion could not be utilised.

The distillation of crude petroleum can only be carried out in such a way that all components of a given group of distillates shall have approximately the same specific gravity; there is always, as the term "group" implies, a number of substances whose boiling points lie between certain limits. With light fuels, produced by fractional distillation, and which cannot but contain several components of different degrees of volatility, there will always be a certain portion of the fuel, namely, that containing the lighter and more easily volatilised components, which evaporates first, leaving behind in the carburettor a much smaller quantity of residue that cannot be evaporated at the air temperatures. The quantity of this residue varies according to the time of year and the temperature of the air, and is greater in cold weather. By providing the carburettor with some kind of heating system, it has been found possible to utilise the greater part of the residue also; this plan, however, is seldom adopted, and in most cases the residue is drained off and thrown away.

As also stated in the chapter on the development of petrol motors, it was not long before a system of supplying fuel was devised, based on a different

Digitized by Google

principle to that of the carburettor. In the Wittig & Hees engines, and in those by Körting, which were brought out in the early 'eighties, the charge required for each individual stroke was for the first time obtained from the liquid fuel direct, without the addition of air, in the form of a fine jet or mist. At the same instant, the very strong current of air was brought into contact with the fuel, evaporating it to some extent and atomising and dispersing the greater part of it. As a spray, the fuel is in a form extremely well suited for use in internal combustion engines. In this form it is carried by the current of air right into the combustion chamber, where it comes in contact with the heated walls and is completely transformed into vapour.

A very suitable arrangement is that used in the Körting oil engine in which the air does not encounter a fine jet, but a mist of fuel. In both systems it is considered advisable to place the spraying device as close to the combustion chamber as possible; the shallow petrol tank was also mounted quite near by, placed not on a higher, but, in fact, on a rather lower level than that of the petrol outlet. When arranged in this way the vacuum created by the suction-stroke is quite sufficient to raise the fuel, and the difference in level of the fuel surface in the shallow tank was so small, that a variation in the composition of the mixture was only noticeable after standing still for long periods, and the necessary adjustment could easily be made by hand.

The Körting engines of this type, which are still built, run in summer and winter with the greatest regularity; heating devices were not applied to them, and they would be suitable for automobiles and motor-boats, if one could become reconciled to providing each cylinder with its own spraying apparatus, placing it in some suitable position quite close to the inlet valve.

At the present time, this system of spraying is only used on stationary engines. In automobile and motor-boat engines, where vibrations of the petrol tank have to be taken into account, and which have as a rule a larger number of cylinders, other plans have been adopted by the builders. But in these engines, also, the fuel is taken from the general supply in the form of one or more jets or a mist; and, moreover, care is taken that the fuel should always be under the same pressure, this end being obtained by the use of a float valve which is uninfluenced by the vibrations and oscillations. On account of one apparatus having to suffice for several cylinders, a modification is introduced and the fuel is supplied in the form of spray direct into the combustion chamber. The several methods by means of which an attempt is made to completely vaporise the spray of fuel and to mix with it the exact proportion of air at the correct instant, involve the supply of previously heated air, an increase or decrease of the effect of suction on the surface of the fuel, and the delivery of additional air.

Automobile engines, owing to rapid variations of load, require a very sensitive hand-regulating device, by means of which the quality of the mixture may be varied. This device, by combining a number of purposes, embraces special features, and has received the name of vaporiser or

Digitized by Google

carburettor. Almost all the large automobile builders now have their own types of vaporisers.

In the following illustrations are shown a number of atomising and mixture-forming apparatus for use with the volatile fuels now used for stationary and automobile engines.

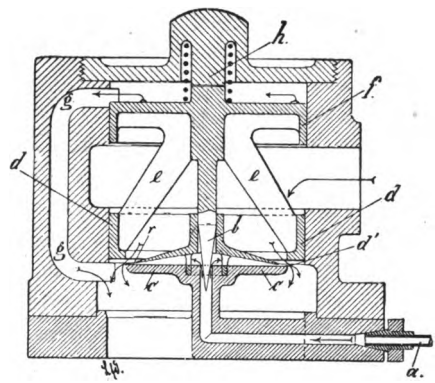

FIG. 34.—Körting's carburettor for stationary engines.

a, Fuel supply pipe; *d*, Needle cut-off valve; *c*, Film-forming arrangement; *d*, Air cut-off piston valve; *e*, Wings connecting valves *f* and *d*; *f*, Suction-valve for raising the valve *b* by the action of the suction of the working piston; *g*, Suction passage in connection with upper side of valve *f*; *h*, Stop for valve *b*.

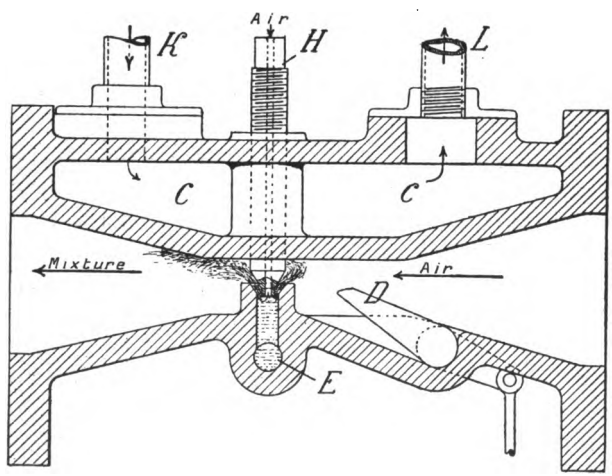

FIG. 35.—Bánki carburettor.

The air for spraying, which enters through the movable tube H, flows out somewhat below the surface of the liquid fuel and reduces the latter to spray. The air for combustion, which arrives at the same instant at D, carries the spray inside the engine. E, Fuel inlet; H, Adjustable tube for the spraying air; C, Heating chamber; K, Entrance of exhaust gases; L, Outlet for the exhaust gases; D, Regulator valve for the air for combustion.

Digitized by Google

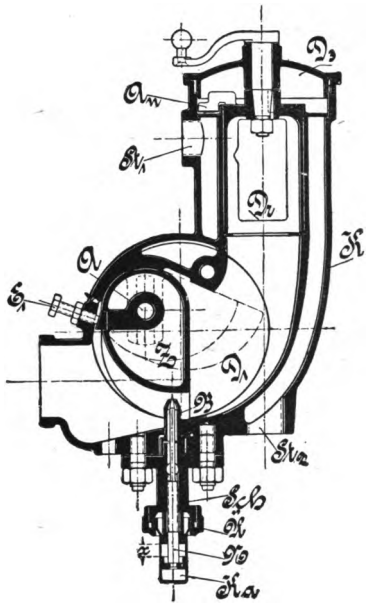

FIG. 36.

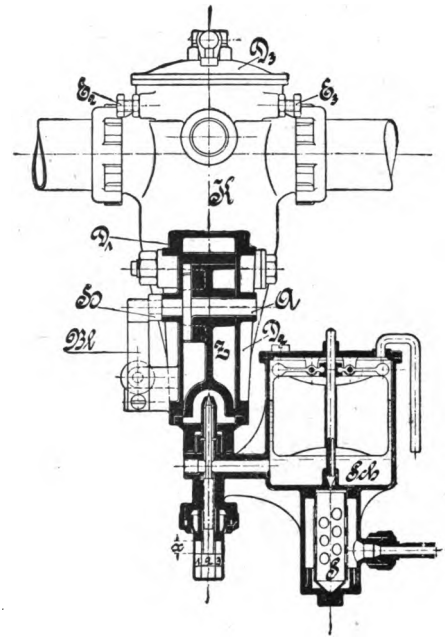

FIG. 37.

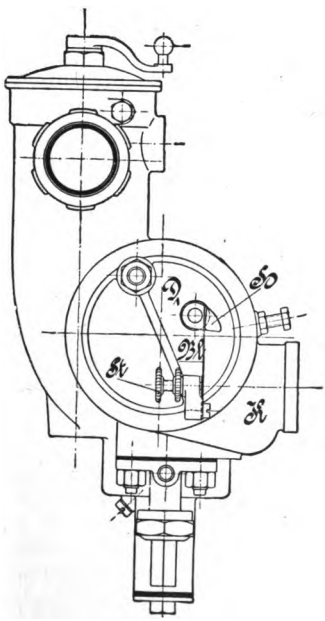

FIG. 38.

FIGS. 36 to 38.—Carburettor of the Daimler Motoren-Gesellschaft, Untertürkheim.

The quantity of mixture formed varies automatically with the demand made for power, or with the quantity of additional air. The proportions of air and fuel always remain the same. The opening of the nozzle can be regulated. The carburettor is hot-water jacketed.

K, Chamber jacket; Z, Air flap-valve—which, according to requirements, allows the passage of a larger or a smaller amount of air; A, Spindle of valve Z; B, Fuel nozzle with variable opening; N, Needle-valve for regulating the opening of the nozzle B; D_1 D_2, Side covers for the valve Z; Bl, Laminated spring for the automatic closing of the valve Z; H, Clamp for the spring Bl; E, Adjustable back stop for the valve; Sch, Float chamber; Ka and U, Device for regulating and locking the needle N; S, Fuel strainer; St_1 and St_2, Outlet and inlet for the hot water; Dr, Revolving tube-valve through which the completed mixture is drawn off; An, Stop for the revolving valve Dr; E_2 and E_3, Screws for limiting the movement of the revolving valve; D_3, Inspection cover for the revolving valve.

Digitized by Google

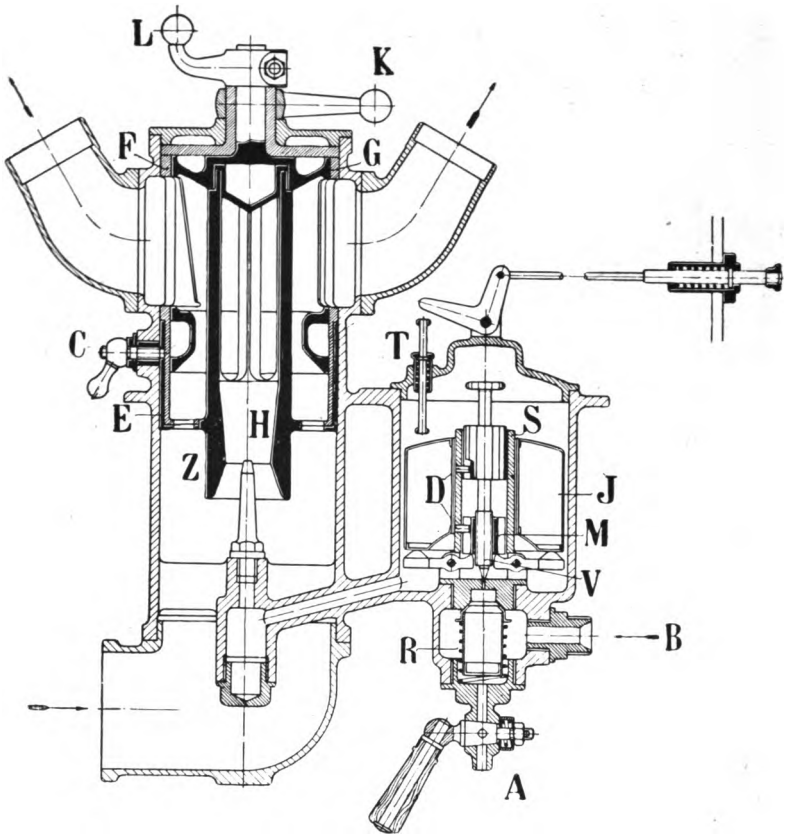

FIG. 39.—Automatic carburettor for automobiles of the Adler-Fahrradwerke, formerly Heinrich Kleyer, Frankfort-on-Main.

The formation of the mixture is altered automatically, according to the demand made for power, by varying the addition of air. The proportions of the mixture are altered by regulating the current of additional air, by means of an automatic governor. The opening of the fuel nozzle is adjustable. The air for combustion may be heated if desirable by the exhaust gases.

A, Blow-off cock for the removal of impurities in the fuel; B, Fuel supply pipe; R, Strainer; V, Needle-valve for the fuel feed; J, Float; S, Tubular guide for the float; M, Nut working along the spindle V; D, Feathers for preventing the spindle V from revolving; T, Dipper for pressing the float down on starting the engines; H, Constricted pipe for the air for carrying off the spray; Z, Annular opening through which the additional air enters; F, Valve for additional air, with openings in the bottom; E, Adjustable valve seating for F; K, Lever for the valve F operated by automatic governor; G, Regulator valve (throttle) for the completed mixture; L, Lever for the valve G, regulated by hand; C, Adjustable clamp for the valve F.

Digitized by Google

UNIVERSITY OF CALIFORNIA

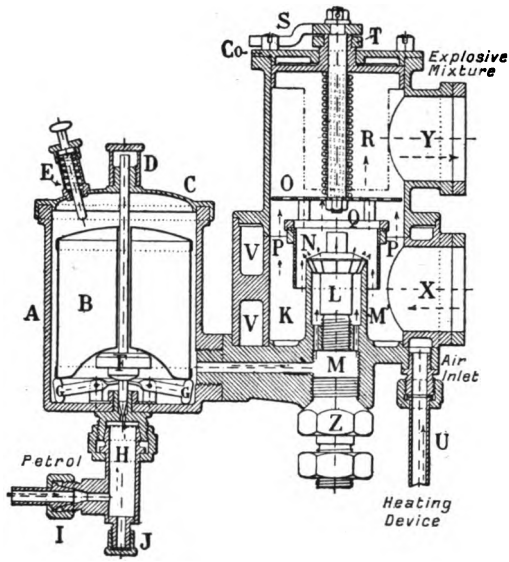

FIG. 40. — Longuemare carburettor for stationary and automobile engines.

A, Float chamber; B, Float; E, Dipper for operating the float by hand, on starting the engine; G G, Float levers; H, Fuel-collecting tube; I, Fuel-supply pipe; J, Drain; K, Air chamber; L, Spraying plug; M, Mixture passage; O, Baffle plate; P, Additional air passage; R, Throttle for the completed mixture; S, Lever of the throttle; X, Additional air inlet; Y, Mixture outlet.

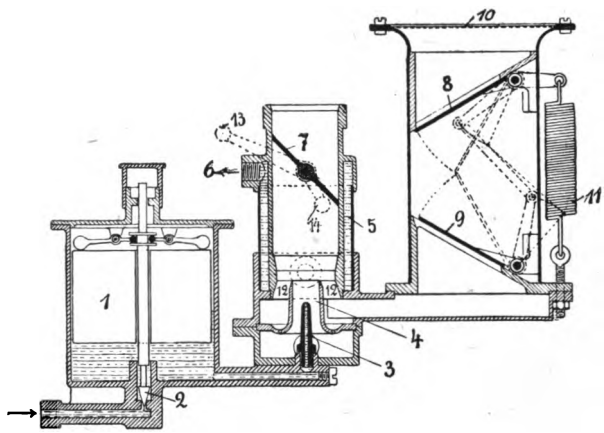

FIG. 41.—Carburettor by A. Clément, Levallois-Perret, Paris ("Bayard" Automobiles).

The composition of the mixture varies, and follows automatically the demand made for power, by regulation of the supply of additional air. The carburettor is hot-water jacketed.

1, Float; 2, Needle-valve for cutting off the fuel supply; 3, Fuel nozzle; 4, Air nozzle; 5, Hot-water jacket; 6, Hot-water outlet; 7, Mixture throttle-valve; 8 and 9, Valves for additional air, which are opened to a greater or less extent by suction; 10, Air strainer; 11, Springs controlling the valves 8 and 9; 12, Annular passage for additional air; 13, Lever for hand regulation; 14, Lever for automatic stopping on throwing out the clutch.

Digitized by Google

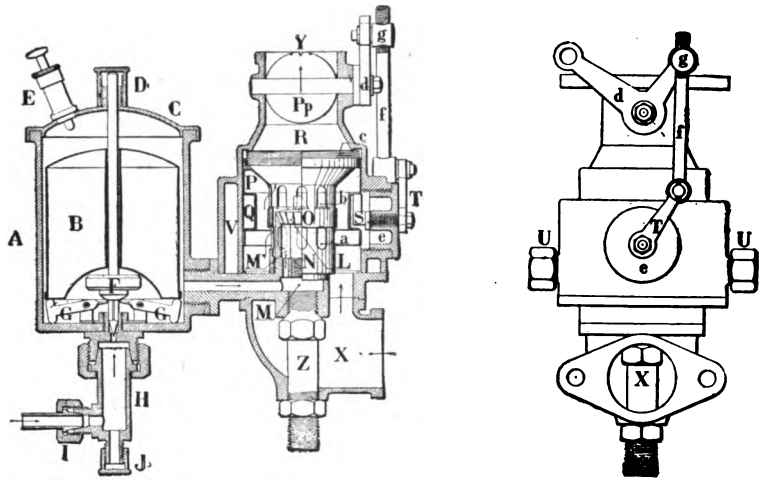

FIGS. 42 and 43.—Longuemare carburettor: latest type for automobiles.

A, Float chamber; B, Float; E, Dipper; G G, Float levers; H, Fuel-collecting chamber; I, Fuel-supply pipe; J, Drain; L, Atomiser; *a*, *b*, *c*, Cylindrical valve for additional air connected to the throttle-valve *p*; *d*, *g*, *f*, Lever connection for throttle-valve and additional air valve; X, Air inlet; Y, Mixture outlet.

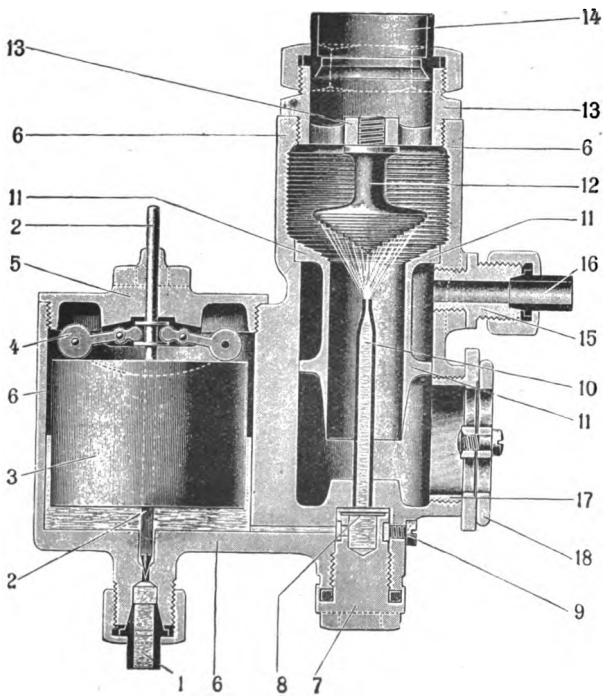

Fig. 44.—Carburettor for the Neckarsulmer Fahrradwerke A.-G. motor cycle.

Variations in the mixture are obtained by hand. Additional air, when required, is supplied quite close to the engine. Heating is effected by the exhaust gases as required.

1, Fuel supply pipe.
2, Regulating needle valve.
3, Float.
4, Float levers.
7, Screw drain-plug.
8, Filter.
10, Fuel nozzle.
11, Mixture nozzle.
12, Spray cone or atomiser.
13 and 14, Screw connection for the mixture pipe to the engine.
15, Exhaust gas inlet.
17 and 18, Revolving valve for air regulation.

Digitized by Google

Carburettors for Heavy Fuels.

In order to arrive at the correct method of supply, vaporisation, and mixture formation, when using the heavier petroleum distillates, it is necessary to bear in mind some of the properties of these distillates already alluded to in the second chapter. It is perhaps most important of all to consider the chemical decomposition of paraffin vapours, which commences at about 270° C. (518° Fahr.), at the temperature, therefore, required to transform into vapour the least volatile parts of lamp oil. The evaporation of oil and the chemical decomposition of the vapours, proceed simultaneously up to a temperature of about 518° Fahr. The higher the temperature rises, the more the chemical decomposition—formation of oil gas—preponderates, and in the end one has to deal with a fuel which has a calorific value different from that of paraffin vapour proper, which also requires different mixture proportions and possesses different properties of combustion. It is not advisable, for these reasons, to exceed by much the evaporating temperature of 518° Fahr., and it is quite as detrimental to let the temperature fall much below that point, for, in the latter case, all the component parts of paraffin are not converted into vapour.

Care must also be taken that the paraffin, when converted to vapour and mixed with air, be protected against cooling by coming in contact with surfaces lower in temperature than 270° (518° Fahr.); for by so cooling, a part of the paraffin runs the risk of being reconverted to the liquid state, thus being removed from the mixture and escaping combustion.

These considerations show that the conditions to be fulfilled by the apparatus for the supply of the required mixture, are not easily met; in fact, an altogether satisfactory solution of the problem has not yet been found. The great advantage possessed by the Diesel engine, in which the fuel for combustion enters directly in the form of spray, and in which the conversion to vapour does not take place, is a very evident one.

Notwithstanding, vaporising in paraffin motors must not be considered an unsolvable problem. The practical advantages which the engines working with vaporisers or carburettors have over the Diesel engine, are so great that it is well worth while to work further at the problem.

From our remarks on the behaviour, as regards evaporation and vaporisation, of the volatile and heavy fuels, it may be gathered that the very generally used name of "carburettor" for the apparatus which insures the supply and formation of the mixture in petrol and oil engines, does not meet the case. Vaporisation and carburetting are processes which, in this instance, produce very different results. Vaporisation is the pure physical action by which a liquid is converted to a vapour. Carburetting is the chemical process by which a body is transformed into another body having different properties. The name carburettor implies an action which does not take place in the apparatus at all: no chemical transformation of the liquid fuel is required nor the production of any gas, but only the formation

Digitized by Google

of vapour. It would therefore have been more correct to style this appliance a "mixture-forming apparatus" both for oil and petrol motors, and not a "carburettor."

The following illustrations of mixture-forming apparatus show how far the conditions for a correct vaporisation and formation of mixture, and its maintenance at a uniform quality, have been met.

Fig. 45 illustrates the Capitaine vaporiser as it has been manufactured for many years by the Maschinenbau-Aktiengesellschaft, formerly Ph. Swiderski, Leipzig. In this, the temperature of the vaporising chamber is kept up by means of a constantly burning lamp.

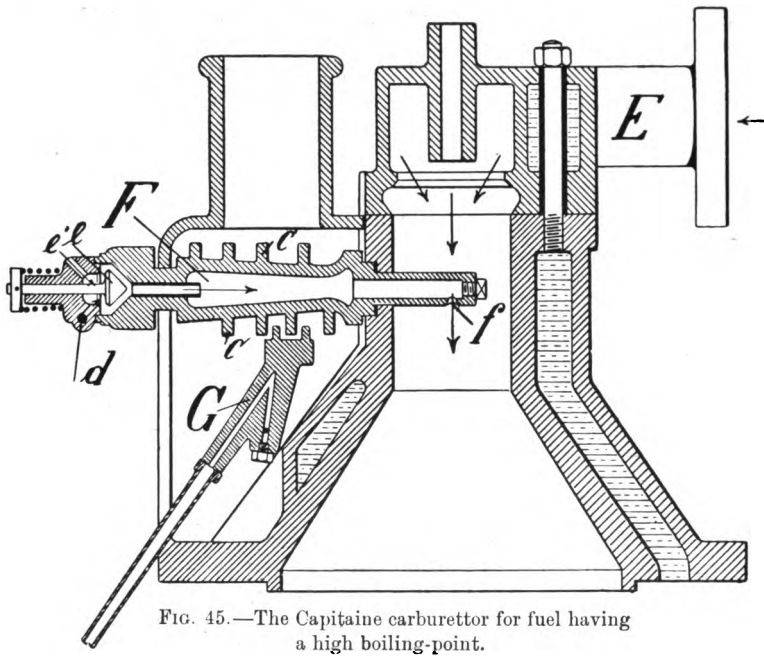

FIG. 45.—The Capitaine carburettor for fuel having a high boiling-point.

d, Oil inlet from oil pump; *e'*, Air inlet for spraying; *e*, Spray-valve; F, Vaporising chamber for spray and ignition space; *c*, Heating ribs; *f*, Outlet for oil vapour; E, Air for mixture inlet; G, Heating lamp.

Among the mixture-forming apparatus in which heating by lamps is resorted to at starting, may be classed all those which are adapted to the engines built on the Hornsby system; a device of this kind is illustrated in fig. 16 in the third chapter.

In the case of the Bánki engine, built by Ganz & Co., Budapest, the carburettor is also heated by a lamp only when starting. This engine works at very high compressions—up to 16 atms. (235 lbs. per sq. in.) —and, in order to prevent premature ignition, water-spray is introduced with the fuel. The devices for fuel- and water-spraying are placed one behind the other in the air inlet passage, so that a mixture of air, fuel-spray,

Digitized by Google

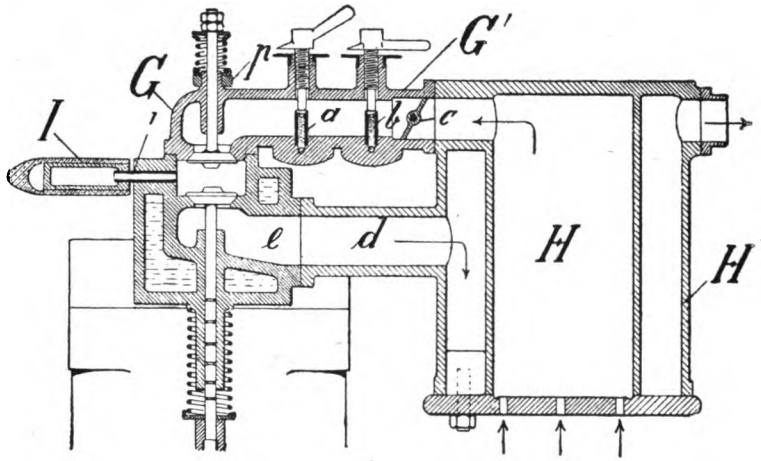

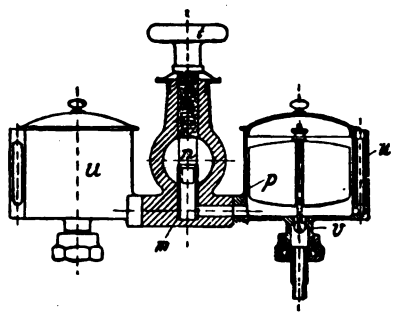

FIGS. 46 and 47.—The Bánki carburettor for oil and petrol engines.

a, Fuel sprayer; *b*, Water sprayer; *c*, Throttle valve in the air inlet; *d*, Passage for exhaust gas; *e*, Outlet valve seating; G, Inlet valve chamber; G′ Air inlet; H, Air heating chamber; H′, Jacket through which pass exhaust gases; I, Ignition; *i*, Ignition tube; *u*, Float chamber; *p*, Float; *v*, Fuel inlet; *m*, Fuel level pipe; *n t*, Feed regulator, as in fig. 35.

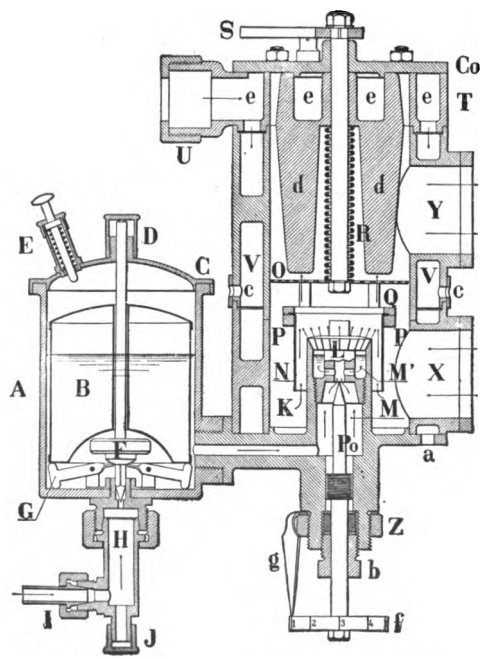

FIG. 48.—Longuemare carburettor for heavy fuel.

A, Float chamber; B, Float; F, Needle valve; G, Float lever; I, Fuel inlet; J, Drain screw cap; P_o, Fuel regulating valve; M′, Fuel outlet; L, Spraying cone or atomiser; X, Inlet for air heated by exhaust gases; K, Passage for the air needed for spraying; P P, Passage for additional air; N O Q R S, Regulating device for air for spraying and additional air; *d d*, Heating bodies; *e e*, Heating passages through which flow the exhaust gases; U, Inlet exhaust gases; *c c*, Outlets for condensed water from exhaust gases.

Digitized by Google

and water-spray is drawn in, and in order that uniform quantities of feed of both fuel and water may be maintained, the supply of both is governed by float valves. The air is highly heated by the exhaust gases. Tube ignition is resorted to, the tube being heated, on starting only, by a lamp. The space inside the tube is made large enough for sufficient mixture to be burnt inside it to keep it at ignition temperature.

Most of the oil engines, and also most of the alcohol and "ergin" engines, are now provided with vaporisers which, at starting, do not require to be previously heated by a lamp, starting-up being accomplished by using, at first, an easily volatile fuel, until the inner surfaces of the valve chest and combustion chamber have reached the required temperature for volatilising the fuel having the higher boiling-point. Fig. 48 shows a vaporiser of this type as built by Longuemare Frères, Paris.

Fuel Pumps.

From the types of carburettors illustrated, it may be seen that with volatile fuels the required quantities are drawn in and sprayed solely by the

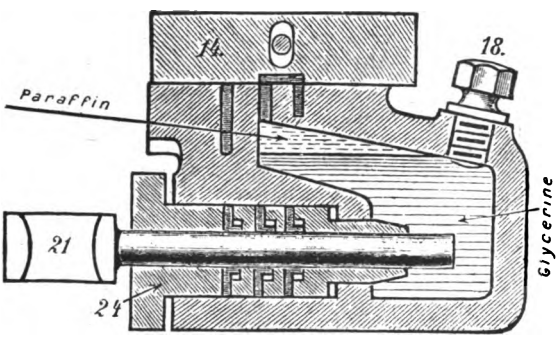

FIG. 49.—Oil pump of the Swiderski oil engine.

14, Distribution valve for the oil (substitute for the valve); 18, Filling plug for glycerine. (Glycerine being a dense liquid, in contact with the piston insures greater tightness of the glands, etc., than is possible with oil); 21, Pump plunger; 24, Stuffing box.

action of the vacuum on the suction-stroke. The proportions of fuel and air are varied automatically or by hand, and heat is supplied to the apparatus according to the work required or according to the weather for the time being. In the case of fuels having the higher boiling-points, this method is not always followed, partly because in several systems—as in the Diesel engine, for example—the fuel is not supplied during the suction period; partly also because, on account of its rapid delivery inside the combustion chamber, it is not necessary to extend the period of admission over the whole of the suction-stroke. In such cases, the vacuum due to the suction of the working piston cannot be used as a motive power, and pumps must be resorted to instead, driven by suitable gear. According to the method followed for governing the engines, one has to discriminate among fuel supply pumps, between those which supply always exactly the same quantity of fuel when the engine is developing its full power and which stop working for a time when there is a reduction in the demand for power, and those in which the fuel supply follows constantly the variations in the load.

Digitized by Google

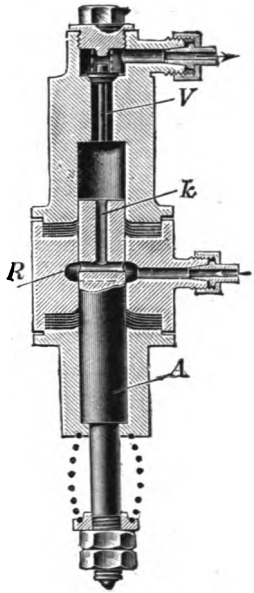

FIG. 50.—The Grob & Co. valveless oil pump.

A, Pump plunger; R, Collecting chamber for oil supply; K, Oil passage in piston; V, Non-return valve.

FIGS. 51 and 52.—Diesel engine fuel pump.

a, Pump plunger; *b*, Fuel-supply pipe; *c*, Float; *d*, Fuel-collecting chamber; *e*, Suction valve; *f*, Delivery valve; *g*, Rod connecting the suction valve gear with the governor; *h k*, Working lever of the suction valve; *i*, Eccentric fulcrum pin; *l m*, Working rod for the suction valve.

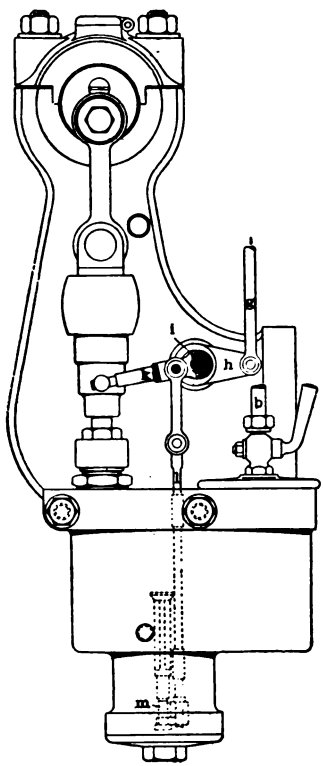

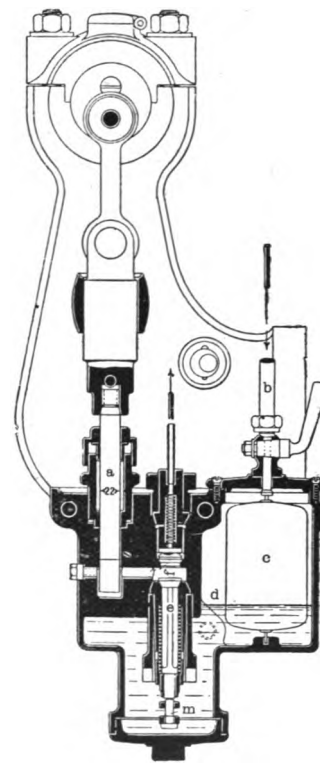

Digitized by Google

Figs. 49 and 50 illustrate pumps of the former type. Fig. 49 shows the pattern adopted by the Maschinenbau-Aktiengesellschaft, formerly Ph. Swiderski. Fig. 50 is that used by the Motorenfabrik Grob & Co. Figs. 51 and 52 show the Diesel engine fuel pump.

A very necessary accessory for all kinds of carburettors is the

Fuel Filter.

The fuel which is supplied through the minute apertures of spraying nozzles, atomisers, and pumps, must be absolutely free from foreign bodies,

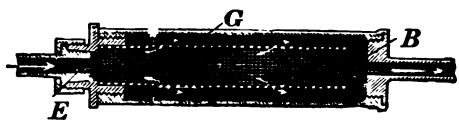

FIG. 53.—The Körting wire gauze filter.

G, Tube formed of several layers of wire gauze; B, Cover; E, Fuel entrance.

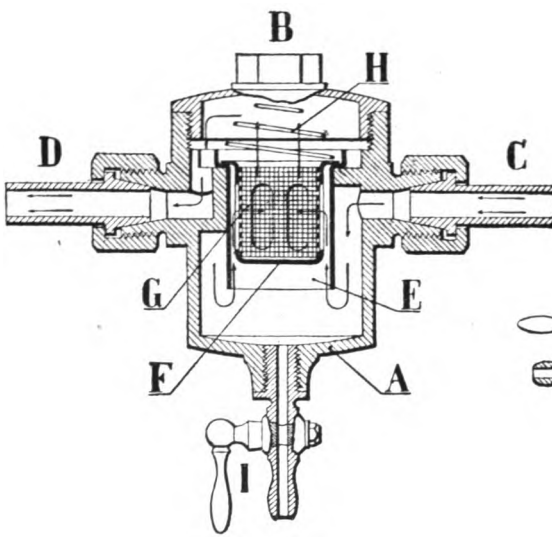

FIG. 54.—The Longuemare wire gauze filter.

A, Filter chamber; B, Screw cap to be removed for cleaning filter; C, Fuel entrance; D, Fuel outlet; F, Base of the filter cylinder; G, Wire gauze cylinder; H, Holding-down spring for the wire gauze; I, Drain-cock.

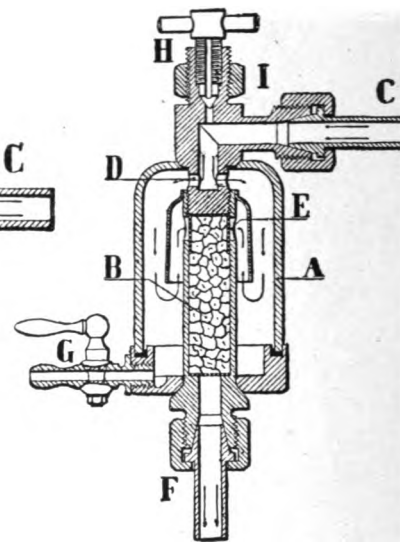

FIG. 55.—The Longuemare filter for automobiles.

A, Filter chamber; B, Filtering substance (salt or pumice-stone); C D E, Fuel inlet; F, Fuel outlet; G, Drain-cock; H, Air pet-cock.

otherwise stoppages are sure to occur, and every liquid fuel engine must, therefore, be provided with a filter. The most simple device consists of a thick felt cloth stretched over a wire gauze sieve in the oil tank.

Wire gauze filters of different patterns, in which the filter surface can be rapidly cleaned, are shown in figs. 53 to 55.

Digitized by Google

Heating Lamps for Oil and Petrol Engines.

The lamps for heating the carburettors and ignition tubes have never received very much attention from engine builders. Even to-day they require a considerable amount of attention on the part of the drivers, and it cannot be said that they are free from danger. They are certainly a constant source of danger in petrol engines, but with these they are now seldom used. Almost all petrol, benzol, and alcohol engines are provided with electric ignition, and it is only in oil engines working with vaporisers that heating lamps are to be found in any numbers. When the use of volatile fuels for starting is completely excluded, as is absolutely the case on boats and ships, the use of the lamps is the only available method for heating up.[1]

A number of builders assert that ignition by means of a tube kept at a constant temperature is the only correct process of ignition for oil engines, and that electric ignition has not proved to be suitable for these engines.[2] In any case, it is necessary for us to include heating lamps among the apparatus we are considering. All pretensions to art, with which the manufacture of these lamps was once attended, have long been abandoned, and the type of lamp now used acts on the principle of the well-known and simple petrol soldering lamps. In both these lamps the fuel is transformed into vapour, and is driven under pressure through a small opening, drawing at the same time with it, as in a Bunsen burner, a current of air with which the fuel mixes, producing a hot flame. The pressure under which the vapour is forced out must be sufficiently high, not only to enable the jet to draw sufficient air with it, but also and for a certain distance to travel faster than it burns. The mixture with the air occurs within this distance; the shorter this distance is, the less the quantity of air mixed with the fuel; and the greater it is, the more air is contained in the mixture. The burner opening regulates also the amount of pressure in the lamp-holder, upon which depends the proportion of fuel and air for obtaining complete combustion and the highest temperatures.

With volatile petrol the necessary pressure can easily be obtained by the external heating of the burner tube and lamp-holder. It is not so easily obtained when using oil, and in this case, generally, the fuel is not heated in the holder, the required pressure being produced by a small air-pump; the vaporising of the fuel takes place only in the burner tube. The Daimler Motorengesellschaft obtain the required pressure for the fuel supply by making use of part of the exhaust gases; they do not use an air-pump driven by the engine. The pressure of the gases exhausting from the engine being too high for the purpose, a pressure-reducing valve is inserted, as shown in

[1] Messrs Körting have patented a heating device by means of an electric current.

[2] In the experience of the author this is only so in the case of engines working with incomplete carburetting, in which, therefore, much deposit is formed in the combustion chamber and valve chests. In boat engines the damp, saline atmosphere, it is true, causes trouble with the wire insulation of electric ignition.

Digitized by Google

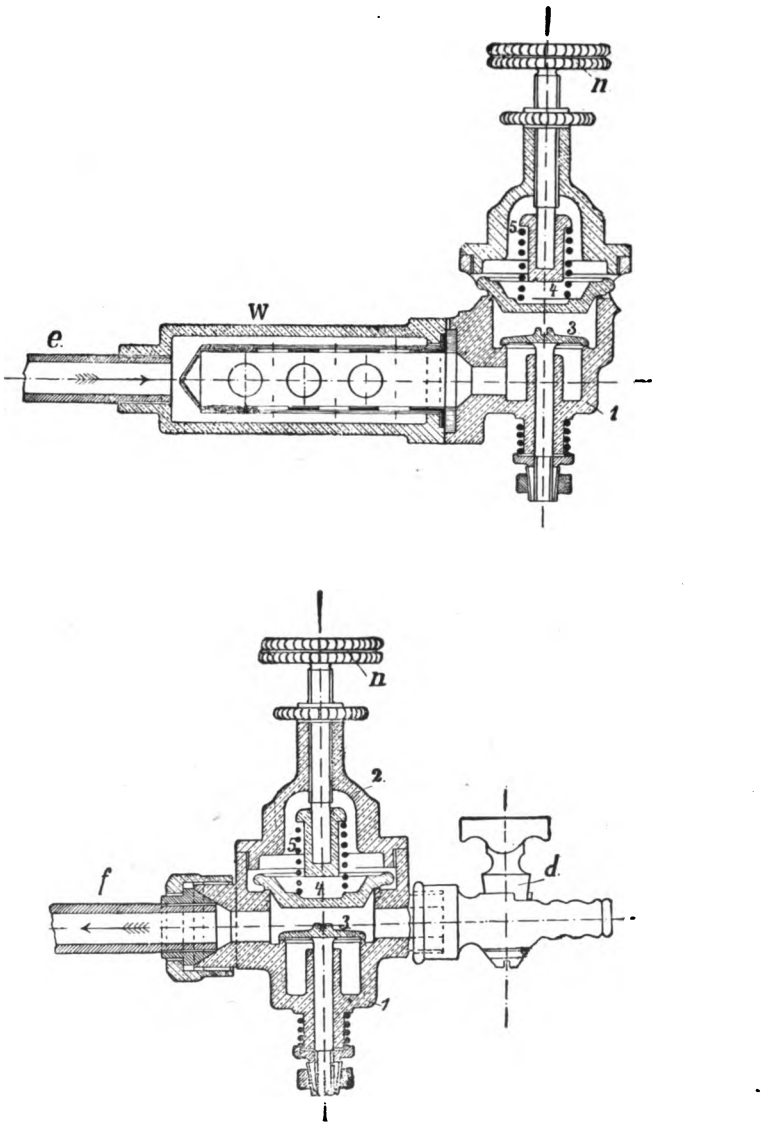

FIGS. 56 and 57.—Pressure-producing devices for heating lamps, used by the Daimler-Motorengesellschaft.

The required pressure for the fuel in the lamp-holder is produced by the action of the exhaust gases.

1, Reducing-valve and safety-valve fitting; 3, Reducing-valve; 4, Safety-valve; *e*, Inlet for exhaust gases, which lift the valve 3 and are led through the tube *f* to the lamp-holder; *n*, Thumb-screw for regulating the safety-valve spring to vary the pressure of the gases flowing to the lamp-holder; *d*, Blow-off cock for dirt, etc., carried over with the exhaust gases.

Digitized by Google

figs. 56 and 57; by means of this valve, only so much of the exhaust can reach the fuel supply tank as is necessary for working the lamp.

The formation of explosive mixtures in the lamp-holder must be guarded against, and when petrol lamps are used, no air must be allowed over the surface of the liquid fuel; when using oil and an air-pump, no oil vapours should be allowed to form over the oil surface. With petrol lamps, a short burner tube is used, so that sufficient heat may be transmitted to the holder;

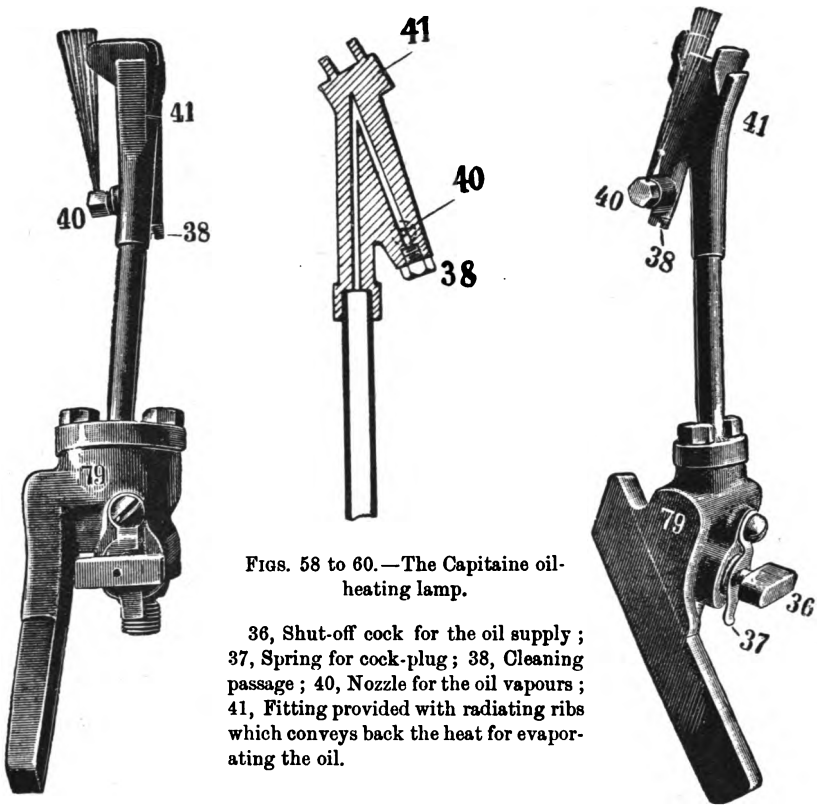

FIGS. 58 to 60.—The Capitaine oil-heating lamp.

36, Shut-off cock for the oil supply; 37, Spring for cock-plug; 38, Cleaning passage; 40, Nozzle for the oil vapours; 41, Fitting provided with radiating ribs which conveys back the heat for evaporating the oil.

while with oil lamps, the heat thus transmitted must be kept down as low as possible and applied to the burner tube only.

The principle on which the heating lamps act, indicates the direction in which they may be expected to give rise to dangerous risks or trouble. In the first place, it should be remembered that evaporation does not cease immediately the flame is put out either purposely or by accident, and that a mixture continues to issue from the lamp uselessly for a length of time dependent upon the heat of the burner tube. When the engine room is of small size and its atmosphere possibly hot, as would frequently be the case in boats, an explosion could easily occur if the lamps were lighted again a short time after they had ceased burning. Experience tends to show that such explosions can be very dangerous both to the men and the craft.

Digitized by Google

It may also happen that the burner head becomes, after a time, wasted away from the action of the combustion gases of the flame and the high temperatures. The device may thus become leaky, and a large amount of liquid fuel may be sprayed out; this may become ignited and, falling on wooden floors, lead to fires. In order to start the lamps, the burner tube must be heated by means of a small alcohol-lamp, or by burning a small quantity of alcohol which is poured into a cup provided on the heating lamp. The oil on entering the burner is gradually vaporised; the vapour issues from the small port under a certain pressure, becomes ignited, giving at first a quiet, clear flame. The burner tube then gradually becomes hotter; the pressure and the amount of vapour increase. The vapour escapes at a greater velocity, and the tip of the flame gets farther and farther away from the nozzle. More air is drawn in under these conditions, combustion is rendered more complete, until a constant burning and non-luminous flame of high temperature is produced. Constant and regular burning is obtained in the following way:—As the vapour formed cannot escape from the small opening as rapidly as it is produced, the pressure inside the burner tube increases, and this reacts and drives the oil back to the tank; the liquid fuel, therefore, withdraws from the hot portion of the burner, and the rate of formation of vapour decreases. Then the pressure in the tank drives the liquid fuel up again, and rapid evaporation again takes place. But such an action would result in a violent fluctuation of the liquid fuel, and would not produce a steady flame. Steadiness is secured by inserting at that part of the burner near which the oil is transformed

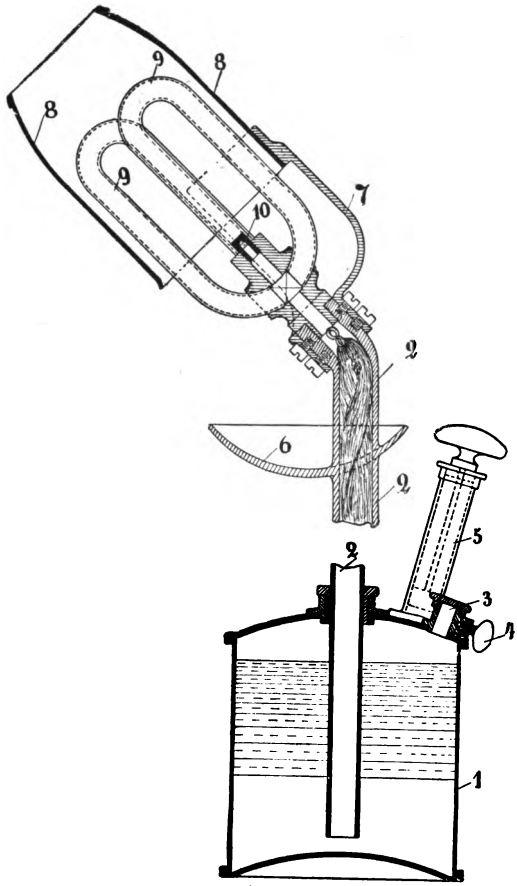

FIG. 61.—Swedish oil-heating lamp.

1, Oil tank; 2, Rising-tube for the oil and wick; 3, Opening for filling the tank; 4, Screw for regulating the air pressure over the oil; 5, Air pump; 6, Cup for the heating fuel for starting the lamp; 7, Bracket for the flame tube; 8, Flame tube; 9, Bent pipe for transmitting the heat to the liquid oil; 10, Outflow for the oil vapour.

Digitized by Google

into vapour, a resistance to the flow in the shape of a wick or of a series of fine wires tied together.

Figs. 58 to 61 show several oil-heating lamps commonly used.

Speed Governors.

Recourse is had to the following methods for regulating the speed of oil and petrol engines:—

1. By the "hit and miss" method in which one or more explosions are cut out ("cut-out" regulation).
2. By varying the quantity of the charge ("admission" or quantitative regulation).
3. By varying the composition of the mixture ("mixture" or qualitative regulation).
4. By retarding ignition.

So long as it was deemed inadvisable to exceed a compression of 3 atms. (44 lbs. per sq. in.) in gas engines, up to, therefore, the middle of the 'eighties it was an accepted rule that speed governing should be obtained by the "hit and miss" method, *i.e.* by cutting out one or more explosions, and this practice was followed in all installations where economical working was the chief consideration, and regularity of running of secondary importance. Governing by varying the quantity of the charge or the proportion of the mixture was in force where great regularity in the running was the principal factor. But when, in course of time, compression in gas engines increased three-fold, this rule held no longer. High compression renders a mixture which is poor in gas more highly inflammable, and causes more rapid combustion, so that the regulation of power for light loads obtained by decreasing the percentage of gas in the mixture, results in quite as economical working as does the older "hit and miss" method of governing. Regularity in running and economical working are thus secured simultaneously.

This improvement in internal combustion engines has been applied as far as was practicable, to both petrol and oil engines; in the case of these engines, however, compression cannot be increased so readily and in the same degree as with gas engines, but it is now carried to the highest possible limit. In oil engines, a larger amount of water-spray is added to the mixture, and the possible limit of compression is in this manner increased considerably. In petrol engines and, as a rule, in automobile engines, governing by cutting off the charge has been altogether given up, and the practice of governing by varying the quantity of the charge or the compression of the mixture, combined with the retardation of ignition, is now almost exclusively adopted. Compression in petrol engines can be carried up to 5·5 atms. (80·8 lbs. per sq. in.) without the use of water-spray, provided the water cooling is entirely satisfactory.

Digitized by Google

The following are the different methods of carrying out governing :—

(*a.*) *By cutting out and missing an explosion.*

1. By cutting off the fuel supply, but continuing to draw in air and compressing it. The best results that have been obtained with this system when running light were ten revolutions for one working-stroke.
2. By omitting the supply of fuel and air, and stopping compression. Obtained by keeping the exhaust valve open so that no new charge but the products of combustion of the preceding charge, are drawn back into the cylinder until a fresh working-stroke is required.
3. By keeping the exhaust valve closed. In this case also, part of the products of combustion are not exhausted into the atmosphere, but are worked about in the cylinder until a fresh increase of power is required. This method is not often employed now.

(*b.*) *Governing by varying the quantity of the charge* ("admission" or "quantitative regulation") is accomplished as follows :—

1. By restricting or enlarging the inlet passage by means of a throttle or disc valve.
2. By varying the lift of the inlet valve or the time during which the lift takes place.
3. By accelerating or retarding the closing of the exhaust valve in combination with an automatic inlet valve.
4. By forcing back a part of the charge into the inlet valve chamber.

"Admission" governing results, when sufficiently high compression is resorted to, in regular running and satisfactory fuel consumption for small loads. This method gives regular ignition for all working, down to light loads.

(*c.*) *Governing by varying the composition of the mixture* ("mixture" or "qualitative regulation") can be effected—

1. By a throttle valve or a disc valve in the fuel vapour pipe, close to the inlet valve.
2. By altering the lift of the fuel valve or the travel of the fuel pump. This method is often adopted for automobile engines and is the most economical, but, with low compression at small loads, it leads to inefficient utilisation of the fuel ; regularity of ignition, when running light, is also unsatisfactory.
3. By varying the quantity of air drawn in by means of automatic or hand-operated devices—the flap valve, for instance, as in the case of the Daimler Motorengesellschaft's carburettor.
4. By graduating the quantity of air drawn in for spraying and the additional supply, as in the case of the carburettors made by the Adler-Fahrradwerke and by Clément.

Digitized by Google

(*d.*) *Governing by retarding ignition* can only be adopted when electric ignition is employed—

1. With sparking plug high-tension ignition, by turning the contact ring on the lay-shaft.
2. With low-tension ignition, by retarding the breaking of the contact and simultaneously rotating the armature or the shield. More details will be given on this point when describing the methods of ignition.

Retardation of ignition on the second plan requires complicated and expensive devices, but this method is now being more and more widely adopted, especially for large automobile machines, where it is commonly known as the low-tension magneto system; it has been used for a long time for stationary engines, and every endeavour is being made to simplify it.

From the above enumeration it will be seen that there are plenty of

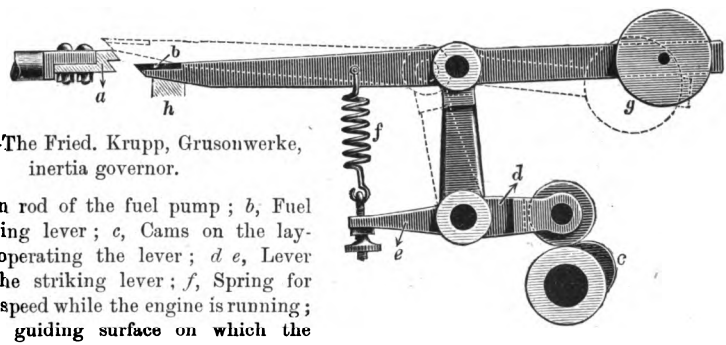

FIG. 62.—The Fried. Krupp, Grusonwerke, inertia governor.

a, Piston rod of the fuel pump; *b*, Fuel pump striking lever; *c*, Cams on the lay-shaft, for operating the lever; *d e*, Lever operating the striking lever; *f*, Spring for varying the speed while the engine is running; *h*, Inclined guiding surface on which the striking-lever rests and by which it is raised when the speed is too great, when it misses the pump rod; *g*, Movable pendulum weight, by which the rapid raising of the lever is facilitated.

methods of governing. The attendant's work would, however, be much easier if there were greater uniformity in the manner of regulating the running of internal combustion engines.

For the "hit and miss" method of governing, in which valves have to be stopped working or held open, inertia governors are the most suitable, or else the swinging weight governor, as these come into play at the proper instant.

In governing by varying the quantity or the composition of the mixture, in which system throttling devices have to be kept in a certain position, the well-known centrifugal governors are, alone, found to give good results. With these, however, it is necessary to ensure that their action shall exactly correspond to the behaviour of the engine, and that they do not hunt, *i e.* fly from one extreme to the other. Such defective devices could not bear the name of "governors," and would only be a hindrance to the running of an engine.

The use of a centrifugal governor is only possible if a small difference in the number of revolutions between speed of running under full load and light —the coefficient of fluctuation of speed—is permissible. But the flywheel

Digitized by Google

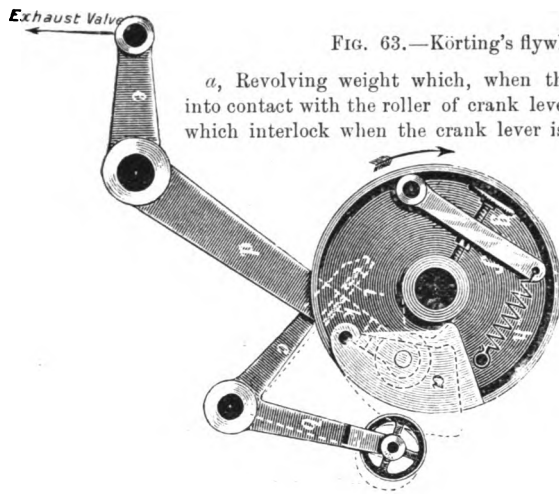

FIG. 63.—Körting's flywheel governor.

a, Revolving weight which, when the speed is too great, comes into contact with the roller of crank lever *b c*; *i k*, Small steel plates which interlock when the crank lever is forced down by the action of the weight *a*, and which hold down the lever *d e*; *e d*, Working lever for the exhaust-valve operated by the dotted cam; *h*, Adjustable spring for drawing back the weight; *f g*, Device for varying the tension of the spring, by which means variation of the number of revolutions is obtained.

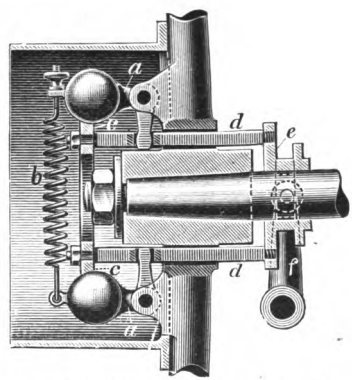

FIG. 64.—Centrifugal governor of the Daimler-Motorengesellschaft.

a a, Revolving weights with crank-lever cast on; *b*, Adjustable spring; *c*, Stop for the revolving weights, forming also a connection between the guide-bars *d d*, which operate the slip-ring *e*; *f*, Lever operating the mixture throttle valve or some other governing device.

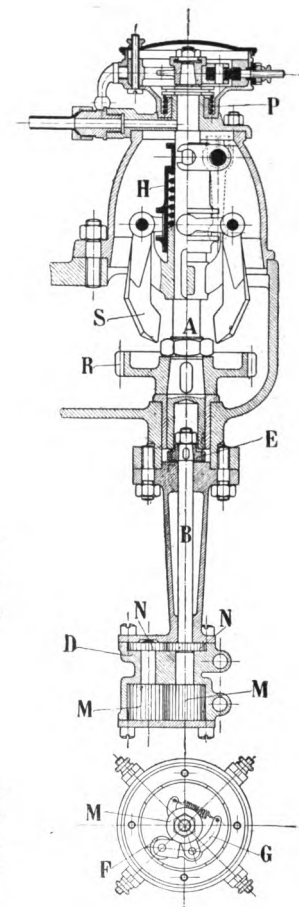

FIG. 65.—Centrifugal governor of the Adler-Fahrradwerke.

S, Revolving weight in four parts; A, Governor spindle; R, Toothed pinion for driving the governor from the lay-shaft; H, Socket with slip ring on which the crank lever of the weights acts, and inside which is fitted the spring which tends to drive the weights downwards. (The remaining references apply to ignition.)

Digitized by Google

must be so heavy that the increase of speed produced by one single working-stroke is not equivalent to or greater than that corresponding to the sensitiveness of the regulator. If these conditions are not fulfilled, even the best constructed governor cannot adjust itself, but will, at each working-stroke, be driven from one extreme to the other as soon as the number of revolutions of the engine departs from normal.

Governors must always be designed so that the speed may be regulated by hand while the engine is running. With automobile engines hand and automatic governors are generally provided, each being completely independent of the other, the automatic governor being provided solely in order to prevent racing of the engine.

Figs. 62 to 65 illustrate the various types of inertia and flywheel governors.

Starting Devices.

One of the greatest drawbacks in internal combustion engines is their failure to start automatically, as do steam engines and electric motors. Only small engines can be started by hand. In slow-speed stationary engines of over 2 h.-p., the effort needed to overcome the compression in the cylinder is so great, that one man is hardly able to start an engine alone, and devices, such as starting valves and compression relieving appliances, are resorted to.

The starting valve takes the form of a relief valve, which can be clamped down when desired, screwed into the cylinder wall a certain distance along the bore; and it acts in the following manner:—The portion of the charge which is contained in that part of the cylinder, extending from the commencement of the stroke to the place where the valve is fixed, is allowed to escape through this valve, and only the remaining portion of the charge is compressed. Resistance to turning will be reduced proportionately. When the engine has reached its normal running speed, the starting valve is screwed down tight and the whole charge is compressed in the proper way.

For relieving compression a device is provided by which the exhaust valve is also made to act as a relief starting valve. For this purpose, a second small cam is provided in addition to the exhaust cam. This causes the exhaust valve to lift for a short time at the commencement of the compression period, allowing a portion of the mixture to escape into the atmosphere, the remainder only being compressed, with the result that the resistance can easily be overcome by hand. The shorter cam is much smaller than the proper exhaust cam, and by sliding them on the lay-shaft either the exhaust cam alone or both the cams are set into gear.

Another device for starting small engines is the starting handle, which is used with automobile and boat engines. These engines have such small flywheels that starting cannot be effected in the manner usual with small-power engines, *i.e.* by turning by hand, pulling on to the flywheel rim. For these engines a hand-crank is provided, keyed on to an extension of the crank shaft close to the flywheel, which it drives by means of a ratchet or catch.

Digitized by Google

For starting the engine, the catch engages so as to turn the flywheel; as soon as the engine commences to run faster than the crank can follow, the latter is thrown out of gear by the back of the ratchet teeth, and as it no longer

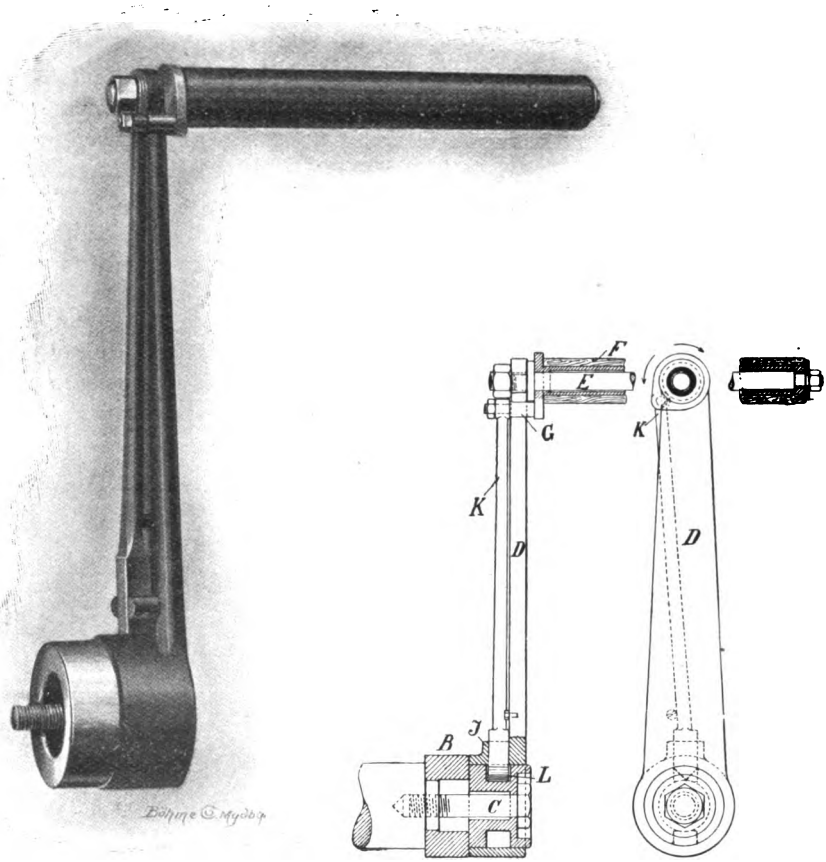

FIGS. 66 and 66A.—Fischer safety crank.

The slanting surfaces on the catch L of the locking-bar K are so designed that the engine crank-shaft is only engaged when the arm is driven in the slit with a certain amount of force. This is produced automatically by taking hold of the handle F. Should premature ignition occur, the catch L is thrown out of gear. The handle thus becomes disengaged from the engine shaft, and only a slight shock is felt.

B, Catch socket; D, Crank arm; K, Catch bar; F, Crank handle; G, Pin connecting handle with catch-bar; K, Catch-bar with catch L; J, Guide for catch; C, Screw, fixing catch socket to end of shaft.

revolves, it can be drawn forward without danger. In automobiles, the crank is held out of gear by a spiral spring.

The use of the starting-crank is attended by a certain degree of danger, especially in engines which work with non-mechanically operated ignition of the hot-tube type, and also in the case of electric ignition when retardation

Digitized by Google

of the spark has been overlooked. In either case, ignition may occur prematurely and the flywheel be driven backwards; the crank is not thrown out of gear, and may injure the driver. The lighter the revolving parts of the engine, the more dangerous may be the blow from the crank, and special care must be given to this detail in high-speed automobile and boat engines. This has led to the introduction of safety hand-cranks, which are disengaged automatically when premature ignition occurs on turning the engine. Figs. 66 and 66A illustrate one of these, manufactured by the Fischer Works, Frankfort-on-Main.

Cylinder Lubrication.

The lubrication of the cylinder and piston is carried out in internal combustion engines under much more unfavourable circumstances than in steam engines. Not only is the temperature of the rubbing surfaces in the cylinder much higher, but the interior of the cylinder is also in communication with the atmosphere during each suction-stroke. As the outside air is laden with dust, this is carried into the cylinder and adheres to the oil inside, causing a considerable amount of wear to take place.

In this respect automobile engines are extremely badly placed, and in spite of the greatest care, the dust of the roads has a most detrimental effect. There are a number of stationary engines which draw the air they require from engine-rooms charged with dust, the cylinders of which are often, in the course of one year, so worn down that they have to be machined afresh. For this reason, the pistons of internal combustion engines have to be made much longer than those of steam engines, even when crossheads and slidebars are employed.

Under favourable conditions, the cylinder and piston of an internal combustion engine which is maintained in good working order, may be taken to last ten years. This applies to a stationary engine of the best make, which runs at a maximum speed of 250 revolutions per minute, and for not more than ten hours a day. The other main parts of the engine last longer. The greater the speed the shorter will be the life of the engine. The cylinder of an automobile engine which runs at 800 or 1000 revolutions, and works for ten hours every day under full load, will not last out ten years; it may be considered as satisfactory if it lasts for two or three years. The quality of the lubricating oil and supply of the right quantity, have a great influence on the maintenance of the cylinder and piston. There are oils which, when used in too large a quantity, prove just as harmful as does insufficient lubrication.

For ascertaining the suitability of a cylinder oil and the right amount to supply, the following points will be found of value:—

1. On drawing the piston out of the hot cylinder, both the cylinder wall and the sliding surface of the piston must be found to be covered with a regular coating of oil.

Digitized by Google

2. This coating of oil should be transparent, showing up the metal surfaces, and should not leave a brown or black mark on the finger.
3. Carbonised oil should not form too large deposits in the valve chambers and on the valve heads.
4. A dark-brown thick substance must not drip from the cylinder mouth while the engine is running.

From the above it follows that the suitability of a cylinder oil can only be ascertained by an actual test with the engine itself. Animal or vegetable oils, which were formerly exclusively used for the lubrication of engines, decompose or carbonise at comparatively low temperatures, and are not suitable for the lubrication of internal combustion engines. It was only when lubricating mineral oils were obtained from the distillation of crude petroleum, in the early 'seventies, that the right lubricant was discovered for the cylinders of these engines; and it then became possible to run internal combustion engines safely for a long period.

Good mineral lubricating oils are pure distillates obtained at temperatures of about 300° C. (572° Fahr.). The oils distilled at lower temperatures have a lower specific gravity than those which are distilled at higher temperatures; they are therefore classified under light and heavy oils. Oils of different specific gravity are used according to the size of the engine, the degree of compression, and the length of the piston. For the most favourable results an endeavour should be made to obtain a coating of oil on the cylinder surface, thick enough to ensure good lubrication, the fresh supply being just sufficient in amount to make up for the portion which evaporates inside the cylinder.

The oil vaporised within the cylinder mixes with the charge, burns with it, and is utilised for power production. When lubrication is carefully carried out, the inside of the cylinder remains perfectly clean. This ideal condition lasts only so long as the same quality and quantity of lubricating oil is used, and the engine will suffer if alterations are made in these respects.

When the oil is too light, the quantity supplied is not sufficient, it evaporates too rapidly, the cylinder becomes dry at the rear end, and wear quickly occurs. If the fresh oil is heavier, less of it evaporates, and the coating in the cylinder becomes too thick. Oil vapours are produced, as already described in the case of the oil engine working with carburettors, all of which are not completely burnt; soot and oil black are produced, which remain attached to the cylinder walls, and in this way wear is increased. This is generally remedied by decreasing the supply of lubricant until it is noticed that the stream of dark-brown thick substance, which ran out of the cylinder end on account of too liberal lubrication, ceases, and the surfaces gradually resume a bright metallic hue covered with a coating of transparent oil, the engine losing none of its power.

Digitized by Google

It is not to be expected that drivers or owners of engines should test the quality of every delivery of oil, and ascertain the right proportion required for lubrication; it has therefore devolved upon engine-builders to test the oil themselves, and to produce such mixtures that their engines, or rather the lubricating devices they use, shall always work accurately when one brand of lubricant is employed. The engine-builders generally supply tested oils at the price quoted by the oil merchant. The specific gravity affords one guide for a superficial selection. The cylinder oils have specific gravities between 0·900 and 0·960, which are ascertained in the most precise way by using an areometer for specific gravities varying from 0·70 to 1. The specific gravity can also be ascertained by weighing a litre measure filled with oil.

The acidity of an oil is ascertained by using litmus paper. Blue litmus paper will turn red in contact with oil containing acid. To test the coom which flows out of the cylinder for the proportion of iron it contains, it is dissolved in benzine, filtered and repeatedly washed with benzine on the filter. The soot and carbon can easily be burnt out of the residue, and there remains behind only iron or rust powder. The quantity of this residue can easily be ascertained by using an ordinary magnet.

Cylinder Lubricating Apparatus.

A good cylinder lubricating apparatus should automatically begin to supply oil to the engine as soon as it is started, and also should stop automatically when the engine stops running. It should also be possible at all times to find out what quantity is being supplied. Simple oil-drop devices with varying level of oil are unreliable, for the number of oil-drops diminishes considerably when the level of the oil falls; these devices, moreover, supply less when the oil is cold than when it is warm, and more liquid.

In well-built engines, the cylinder lubricating devices take the form of pumps driven off the lay-shaft, which always supply the point to be lubricated with a regular quantity of oil. For long pistons and high degrees of compression, such as are now mostly used, pumps which deliver the oil between the surfaces of the cylinder and the piston are recommended. These have also been introduced in large automobile engines. By using this method of lubrication under pressure, the point at which the oil is supplied can be placed nearer to the back end of the cylinder; the oil-hole may be arranged just at the furthest point reached by the last ring of the piston on its outward stroke. The oil must be delivered on to the piston when its rings come opposite the oil-hole. If the oil is supplied to the piston without pressure, the oil-hole must be placed further forward in a position corresponding to the front half of the piston on its outward stroke. Otherwise, when the piston becomes less tight, it may be possible for the oil to be driven back to the lubricator.

Digitized by Google

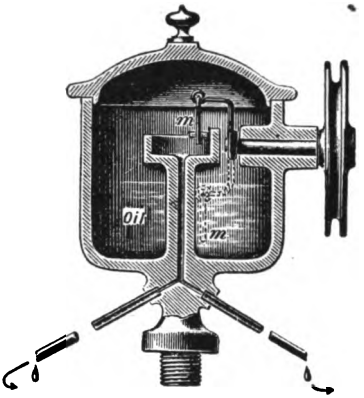

FIG. 67.—Lubricator of the Gasmotorenfabrik Deutz.

i, Rope pulley driven from the lay-shaft; *m*, Wire by which oil is lifted and delivered to the cup.

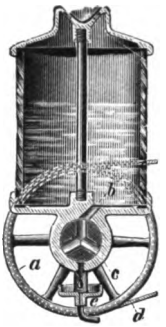

FIG. 68.—Körting's cylinder lubricator.

a, Rope pulley driven from the lay-shaft; *b*, Outlet to the oil distributor *c*; *e*, Oil cup in which the oil can be seen collecting; *d*, Driving ropes.

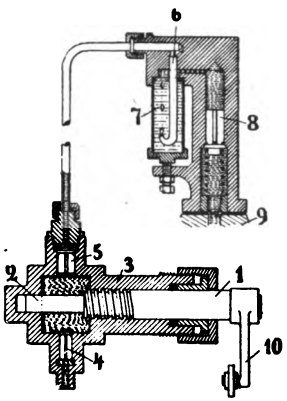

FIG. 69.—Gasmotorenfabrik Deutz pressure pump.

1 and 2, Pump piston working in and out by screw threads 3, when lever 10 is given a rocking motion; 4, Suction valve; 5, Pressure valve; 6, Outlet pipe for the oil under pressure; 7, Glass tube fitted with salt water in which the oil-drops rise on delivery from the pump; 8, Relief valve preventing the entrance of combustion gases inside the oil pipes; 9, Boss on the working cylinder to which the lubricating apparatus is fixed; 10, Lever with roller driven from the lay-shaft.

The glass holder is not under pressure, and can be filled at any time while the engine is running. The supply can be varied by turning the screw on the connecting head.

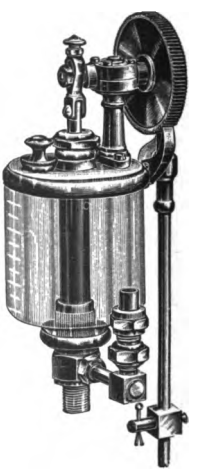

FIG. 70.—Lubricating pump of Blanke & Rast, Leipzig-Plagwitz.

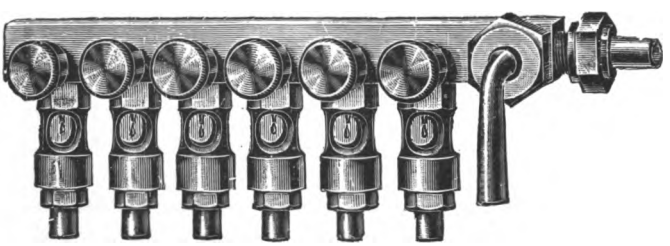

FIG. 71.—Blanke & Rast oil distributor for pressure lubrication.

Digitized by Google

Various types of lubricating apparatus are shown in figs. 67 to 71. The oil from the bearings and other lubricated parts is by no means

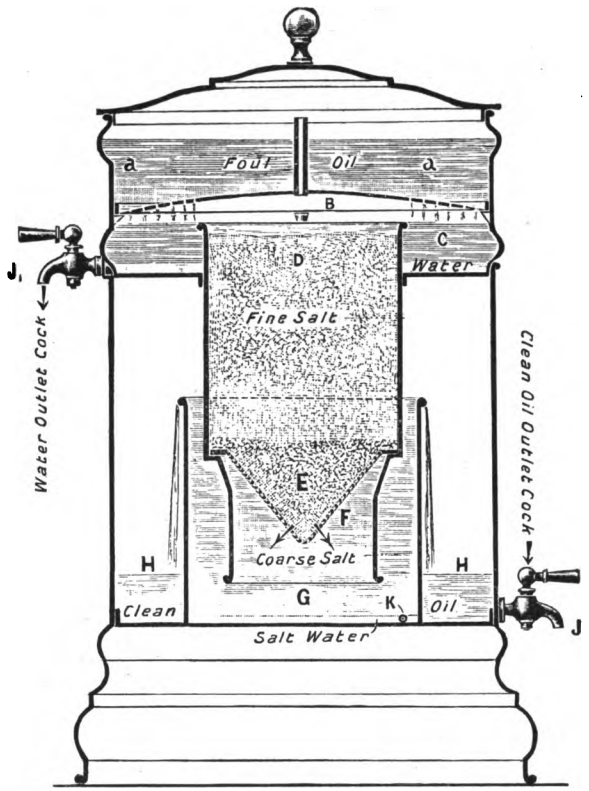

FIG. 72.—Oil cleaning apparatus, with salt filters, by Blanke & Rast, Leipzig-Plagwitz (German patent).

The salt filters free the oil from the dirt and water it contains. The water separated is allowed to escape through the cocks J_1 and K.

valueless; it may be collected, and, after filtration, used again afresh Fig. 72 illustrates a filtering apparatus.

Digitized by Google

CHAPTER V.

IGNITION DEVICES FOR OIL AND PETROL ENGINES. GENERAL REMARKS.

THE most distinctive feature of oil and petrol engines is the ignition system, by which the heat needed for the ignition of the charge is produced at the right instant inside the combustion space. The following methods of ignition are used:—

1. Burning gases.
2. Hot solid bodies.
3. Electric spark.
4. By high compression of the heated air.

The oldest methods of ignition are the electric spark and burning gases. Ignition by burning gases was adopted for gas engines up to the middle of the 'eighties, but was not used either with oil or with petrol engines, for in these engines the gas required for the flame was not available.

A notable impetus was given to the application of liquid-fuel to engine-driving purposes, when it was found possible to use hot solid bodies for securing ignition, on the introduction by Daimler of automatic hot-tube ignition. But this method also has its disadvantages, for it necessitates, in the cases where petrol and similar fuels are employed, the use of a constantly burning heating lamp, fed with a liquid-fuel similar to that supplied to the engine. The use of these lamps entails risk of fire, and they cannot be said to be, in any way, reliable and safe devices; they need constant attention, and their use requires experience.

Besides these disadvantages of a practical nature, hot-tube ignition has a further defect in that the timing of the ignition cannot be controlled. It is possible, it is true, by resorting to suitable mechanical appliances, to retard hot-tube ignition to such an extent that firing occurs after the dead centre is passed; but there is no means of advancing it, if desired, before the dead centre is reached. This disadvantage is mostly felt in high-speed automobile engines, in which early combustion is absolutely necessary in order to develop the greatest amount of power. Attention was therefore re-directed to the almost forgotten electric ignition, by which firing at any required

Digitized by Google

instant and at any desired part of the combustion chamber was easily possible. With electric ignition no preparation was necessary before starting, the readiness of the engine for service being thus considerably increased. Moreover, no slides, valves, or complicated arrangements were needed, and it could be used without risk of any flame or spark being formed outside the cylinder, all of which points were of great practical value. It might be supposed from this enumeration that the electric spark provided the ideal method of ignition; unfortunately, however, this is not the case. Notwithstanding the care which has been bestowed on the simplification and improvement of electric ignition, it cannot yet be said that it fulfils all the requirements as regards safety and simplicity, which one has a right to expect in engines.

In oil and petrol engines, hot-tube ignition, electric ignition, and ignition by highly compressed air are used.

Hot-tube Ignition.

Daimler, the founder of the automobile and engineering works "Daimler-Motorengesellschaft," who died in 1899, was the inventor of automatic hot-tube ignition. A patent for an ignition tube was taken out as early as 1879 by Leo Funk, but the action of this tube was not automatic. Its interior was placed in connection with the clearance space containing the charge, at the very instant ignition occurred, by means of a mechanically operated slide. The characteristic feature of the automatic hot tube is that its interior surfaces are continually in communication with the clearance space and the charge contained therein. Funk's invention was, nevertheless, of value, and it was extensively used in the late 'eighties and early 'nineties as a mechanical system of hot-tube ignition. Its use facilitated the starting of large engines, in the case of which, when turned by hand, pre-ignition was frequent, since it was not possible to give the flywheel the regular speed to ensure well-timed action for the ignition tube. The two inventions were materially different. Daimler's patent was valid up to 1898.

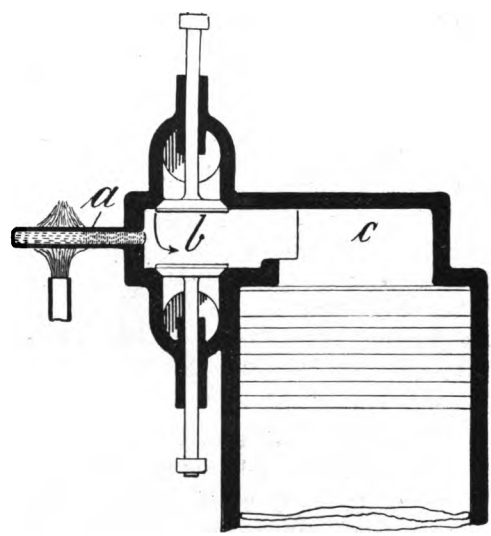

FIG. 73.

The great simplicity of the Daimler tube-ignition system led to its being adopted, long before the patent lapsed, by a large number of manufacturers

Digitized by Google

who were unaware that they were thereby infringing Daimler's rights. It was only during the last years of his patent that Daimler fought the infringements with success.

Fig. 73 shows the ignition tube in connection with the combustion chamber; it is close to the inlet valve *b*, at the point, therefore, where, on the completion of the introduction of the charge, the presence of an inflammable mixture can be relied upon. The tube being closed at one end, its interior does not come into contact with an inflammable mixture on the admission of a fresh charge, for it remains filled with combustion products. It is only during the compression period that a part of the fresh mixture is driven inside the tube, when the products of combustion it contains are forced more and more towards the heated end, and on reaching the hot zone, the mixture becomes ignited. It might be thought that ignition would then extend directly to the charge contained in the combustion chamber, but this is not the case, and more frequently this becomes ignited only on the completion of the compression period, or shortly before this point. This is a feature of the Daimler hot-tube ignition system. With the engine running at its full speed, the flame is kept inside the tube until the instant for ignition of the charge occurs.

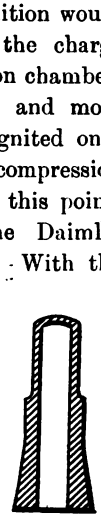

Fig. 74.

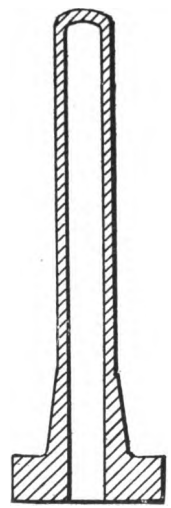

Fig. 75.

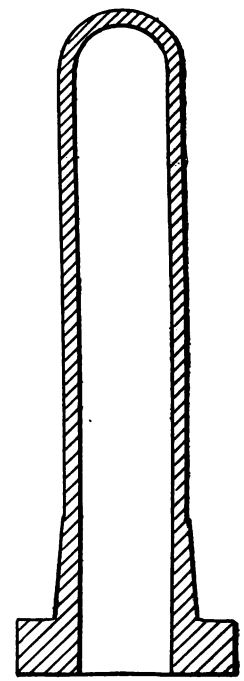

Fig. 76.

As soon as a flame has been formed at the hot zone, the ignited stratum of gas is acted on by two opposite forces, one being that with which the process of ignition of particles of fuel tends to spread backwards to other fuel particles, and the other the force of compression driving the mixture inwards. So long as the latter is sufficiently great to overcome or neutralise the effect of the rate of combustion, the ignited stratum remains in the tube, and it is only when the piston nears the end of its stroke and the rate of compression decreases, that the ignited stratum works towards the charge in the combustion chamber to communicate to it ignition near the dead-centre. The timing of ignition varies with the length of the hot tube and the position of the hot zone.

For obtaining well-timed and regular ignition, the hot tube must not exceed certain proportions, in order to ensure the mixture which can flow

Digitized by Google

into it filling up the whole cross-section. If the tube is of too wide a diameter, eddies and counter-currents are set up; the period of ignition varies; knocking is produced in the engine and premature ignition often occurs, especially at starting.

The mixture must form, as it were, a piston or plug inside the tube, filling up the whole section. This has a great effect on the well-timed ignition. A vertical tube acts better in this respect than a horizontal one. The tubes are made of porcelain, platinum, and nickel.

Porcelain is advantageous in that it rapidly becomes hot and maintains its heat for a long period; it resists the chemical action of the hot flame, and is cheap. On the other hand, it may easily be broken or cracked if it should come into contact with water. Platinum offers a greater resistance to mechanical action, but it is very costly and is only used for automobile or boat engines. Nickel does not withstand the corroding action of the flame so well as platinum, and the wall of the tube has to be made much thicker. At the present time only porcelain and nickel tubes are used; the first are often made with a metal end for fitting them to the engine. Figs. 74 to 76 show porcelain hot tubes of the current dimensions.

Electric Ignition.

Although hot-tube ignition is both simple and cheap, the fire risks which the use of heating lamps entails and the impossibility of retarding ignition within sufficiently wide limits, have contributed largely to a return to electric ignition which, as is well known, was used in the early 'sixties by Lenoir as the means of ignition in his gas engine.

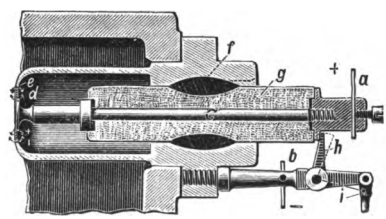

FIG. 77.

At that early period the many imperfections in the apparatus used for producing current and for sparking, had thrown electric ignition into disrepute. As soon as electro-technics furnished more perfect devices, fresh efforts were made to render the electric spark of service for internal combustion engines.

Only a very few years after the invention of the dynamo, this new current generator is to be found in use with the old stationary Benz two-stage engine. The dynamo was driven from the flywheel by means of a rope; the current was transmitted to an induction coil, the high-tension current from which was used for producing the ignition sparks.

As seen in fig. 77, the lead from the coil was connected to *a*, whence the current passed along the rod *c* surrounded by the porcelain insulator *g* into the combustion chamber, a number of sparks being formed between the points *d*, *e*, the circuit being completed through the wall of the combustion chamber and wire *b*.

Digitized by Google

The dynamo and coil were always kept working, and current circulated not only during ignition, but also when ignition was not required. Some other circuit had therefore to be formed for it, and this was provided by the crank lever *h*, *i*, so long as the arm *h* was in contact with the rod *c*. During the period of ignition the crank lever *h*, *i*, was placed in the position shown by dotted lines. The spark between *a* and *e* occurred the moment the distance between *h* and its corresponding contact was greater than the distance between the points *e* and *d*. In this device sparking also occurred outside the combustion chamber during the lifting of the arm *h*.

A further improvement in electric ignition was made when a magneto-electric device was used instead of a dynamo continuously running. This device generated current at the moment of ignition only, and of such a strength that an induction coil could be dispensed with.

So far as the author is aware, these devices were used for the first time in 1889 for the petrol engines of the Gasmotorenfabrik Deutz, and were made by the firm of Robert Bosch, Stuttgart.

Besides this new method of current supply, another device connected with the sparking arrangement was then introduced. The voltage of the current was not great enough to produce sufficiently strong sparking between two fixed points, and it was found to be necessary to separate rapidly at the moment the current was produced two points in contact with each other. By this means, the almost invisible spark could be increased considerably in length, and in spite of the use of much lower pressures, ignition was much more reliable than with a higher tension current between two fixed points.

In its original form, the magneto-electric device had long been known. Originally invented by Werner von Siemens, with an I-shaped armature, it was now applied to electric ignition. It consists of a powerful permanent horse-shoe magnet, between whose limbs is rotated an I-shaped armature, wound with insulated wire. When the armature revolves, each time the coil-windings cross the space between the ends of the magnet, current is formed in the windings. The greater the speed of revolution, and the more powerful the magnet, the stronger will be the current generated.

If the ends of the wire coils of such an apparatus form a closed circuit through the combustion chamber, and the speed of the armature be so governed that the windings cut the space between the ends of the magnet—the poles—at the instant of ignition, the circuit at the ignition point being broken at the same instant, strong sparking will take place at the point at which the break is made, and the sparking will be stronger as the circuit is broken more quickly. This is referred to as breaking contact.

Both these functions—viz., the rapid rotation of the armature and the breaking of the circuit—must not only be properly performed at the normal speed of the engine, but also when it is working at low speed, as in the starting of stationary engines. In order that these conditions may be fulfilled, the ignition device must not be driven direct from the lay-shaft, but mechanical means must be resorted to, and the lay-shaft be only indirectly

Digitized by Google

of service. As shown in figs. 78 and 79, which illustrate examples of these ignition devices, strong spiral springs are used for operating the shield, the springs being stretched by a lever and pawl on the lay-shaft, and released at the correct moment of ignition.

The reciprocating action of the heavy armature, owing to its inertia, has a bad effect on the bearings, and efforts made to improve this have led Bosch to insert between the armature and the sides of the magnet a light rocking shield. In this form, the heavy armature is stationary while the shield is rocked. The generation of current is not influenced by this arrangement, while the necessity of collecting the current by brush contacts is obviated, it being taken directly from a motionless armature, as seen in fig. 78.

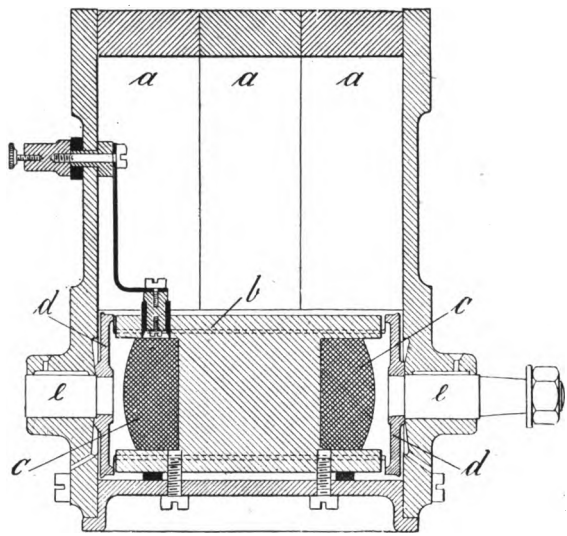

FIG. 78.—*a*, Horse-shoe magnet; *b*, I-shaped armature; *c*, Wire coil winding; *d*, End of rocking shield; *e*, Spindle for shield.

In automobile engines, which can be turned so quickly by hand that sufficiently strong sparking is produced at starting, it is not necessary to rotate the armature, but it may be driven direct from the larger cam shaft by gear or chain transmission.

Points of great importance in magneto-electric ignition are connected with the supply and breaking of the current. The advantage possessed by the Benz electric ignition, illustrated in fig. 77, in which the current is led by conductors inside the engine, disappears with magneto-electric ignition. In the latter, the circuit is broken inside the combustion chamber; movable parts working in glands are necessary, and these may cause numerous failures, to which we shall refer later on when dealing with breakdowns, to which engines are liable. Fig. 80 shows the circuit breaker which has been most generally adopted up to the present.

Digitized by Google

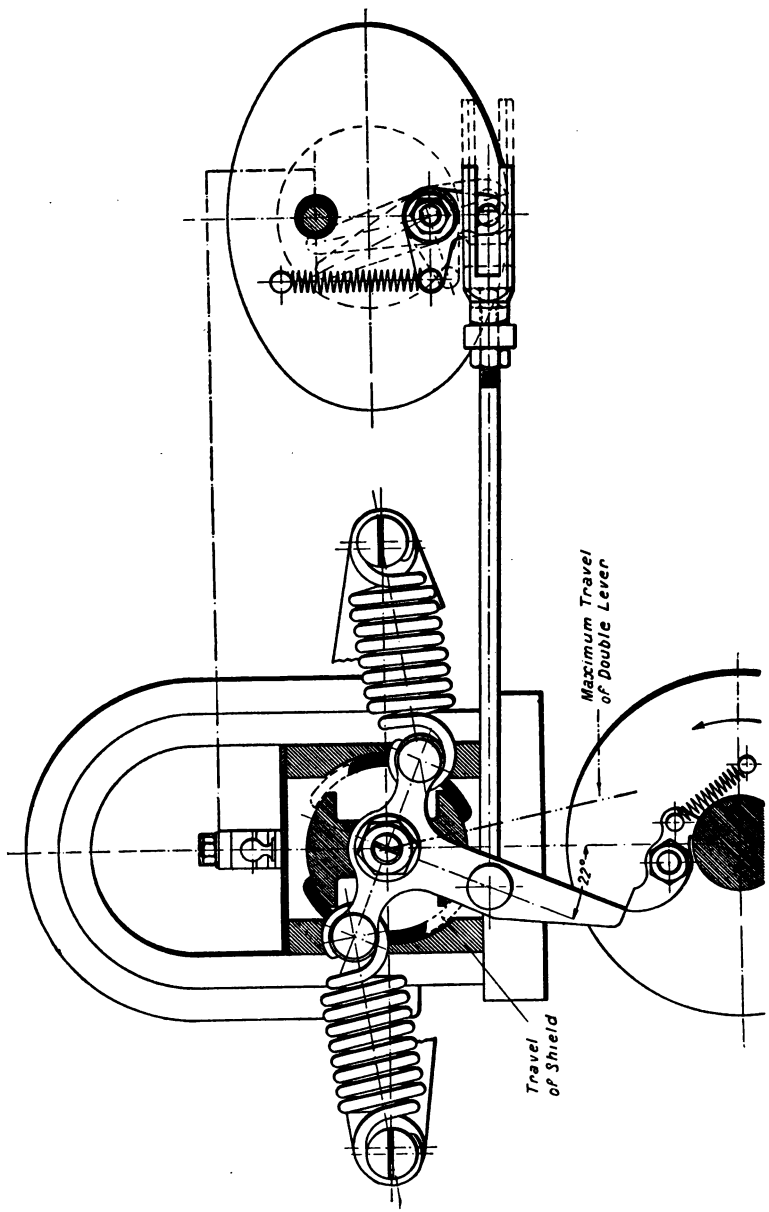

FIG. 79.—Magneto-electric ignition for stationary engines by Robert Bosch, Stuttgart. Maximum rotation of shield. Extreme position of T lever on return.

Digitized by Google

In order to be able to test the circuit-breaking device rapidly at any time, both electrically and for leakage, it is mounted on its support or flange in such a way as to be easily removed from the combustion chamber by taking out two screws. As is well known, the ignition in an engine running at full-speed has to take place much sooner than at starting. The quick-return motion of the armature, or rather of the shield, and also the interruption action of the ignition lever, have therefore to take place at different periods during running, and must be adjustable. So long as the armature and interrupter rods are operated by the same springs, the moments of greatest intensity of the current and the breaking of the contact coincide. If, however, the armature spindle is driven direct from the cam-shaft, as is the case in high-speed engines, the moment at which current is at its maximum cannot be made to correspond readily with the various instants at which the circuit is broken, and both must be adjusted to the altered conditions. As a rule, this double regulation is not used, and the breaking device alone is

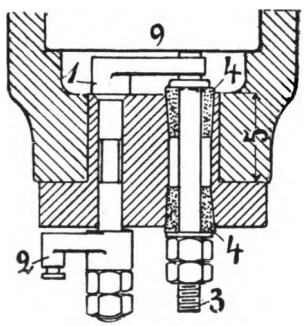

FIG. 80.—Ignition mounting.

1, Inside contact-breaking or ignition lever.
2, Outside contact-breaking or ignition lever.
3, Contact pin.
4, Insulating cone, also insuring tightness, of soapstone or steatite.
5, Depth to which the ignition mounting enters the engine casting.

made adjustable, while the working of the armature remains constant. The less satisfactory positions of the armature are passed so rapidly that sufficient pressure for ignition is produced. It is only in engines in which special reliability of ignition is required, and in which a variation of speed within wide limits is necessary, that ignition devices in which the armature and breaking device can be simultaneously adjusted, are needed.

The perfect insulation of the fixed contact gave rise to a number of difficulties, and all kinds of insulation material have been tried—porcelain, enamel, soapstone, mica, etc.,—but so far none has been found to meet all conditions. It is necessary that it should not only be most reliable as an insulator, but it must also be able to withstand the high temperature inside the combustion chamber, and the mechanical action of the ignition lever in striking the fixed contact. Fig. 80 shows one of these devices with soapstone insulation. Figs. 81 to 83 illustrate magneto-electric apparatus of the Apparatenbauanstalt Fischer, Frankfort.

The electric contact-breaking ignition, as first introduced, was not suitable for high-speed automobile engines, in spite of its many advantages. The rocking motion of the movable levers of the contact breaker is immaterial in slow-speed stationary engines. At speeds exceeding 400

Digitized by Google

revolutions per minute there is, however, such excessive wear of the pins and joints, that for speeds of 800 revolutions and over, its use is absolutely impossible. The moving lever contact, though tightly packed at first, soon wears and causes leakage, and, on account of the small capacity of the cylinders in automobile engines, such loss is very noticeable.

The automobile builders, in the earlier days, had therefore to be content with tube ignition and the old system of electric ignition, in which an induction sparking coil was used; hence they had to look for improvements upon these methods in some other direction. Efforts towards this end were

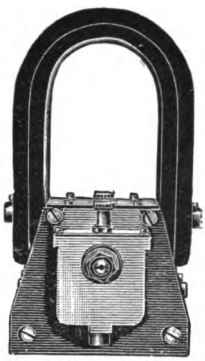

FIG. 81.

Magneto-electric ignition apparatus, with rotary armature, for automobile engines.

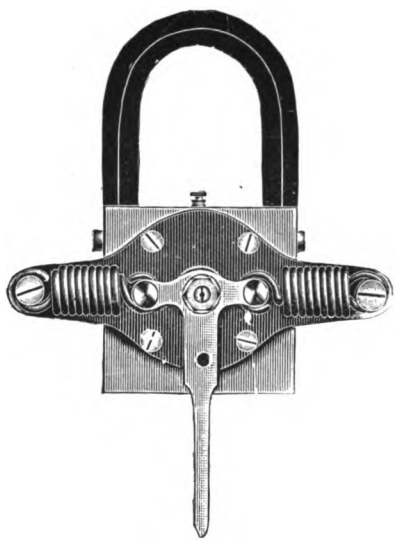

FIG. 82.

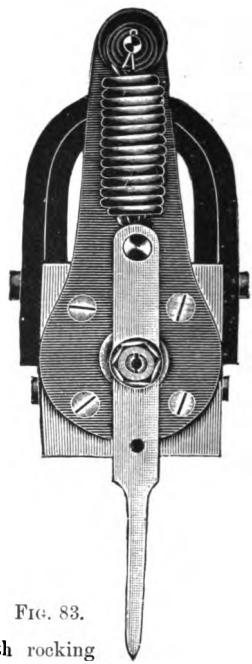

FIG. 83.

Magneto-electric ignition apparatus with rocking armature shield, and different types of springs for stationary engines.

successful at the time of the great boom experienced by the automobile industry in France, and to the firm of Messrs de Dion et Bouton, Puteaux, near Paris, are due marked improvements in electric ignition. They provided the small high-speed engines, which they were then fitting to motor-tricycles, with an ignition device similar to that of Benz referred to at the commencement of the present chapter. But a new departure in the Dion-Bouton device was the removal of the induction coil, which involved an uneconomical consumption of current, and in which the Neef hammer had proved to be a very unreliable fitting; while, when using the induction coil, the circuit breaking was effected by the electric current itself. In this case the engine gearing was resorted to. The description given in Chapter VIII. of the old de Dion-Bouton engine, shows the manner in which this was

Digitized by Google

done. A further improvement in electric ignition was introduced by the French firm when they brought out the sparking plug, which has been very generally adopted.

Accumulator batteries had been improved, and could now be used as a source of current supply for electric ignition. The de Dion-Bouton sparking plug supplied with current from a battery became a suitable ignition device for high-speed engines; it was simple and cheap, contained no moving parts, and was not dependent in any way upon the number of revolutions of the engine. Since the current is required only at the instant at which ignition takes place, comparatively small and light batteries are sufficient for long journeys.

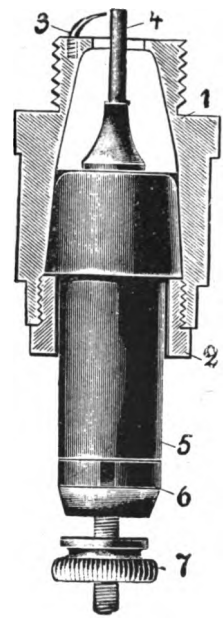

FIG. 84. — Sparking plug of the Neckarsulmer Fahrradwerke.

1, Screwed holder; 2, Screwed nut for fixing in the insulating shell; 3, Platinum wire, at the point of which the spark is produced; 4, Current lead; 5, Insulator; 6, Nut for holding the current lead inside the shell; 7, Terminal connected to the plug with the contact breaker.

As already stated, the early form of sparking plug ignition device is shown in the old de Dion-Bouton engine. Figs. 84 to 86 show later forms, these particular ones being made by the Neckarsulmer-Fahrradwerke.

The attempts made to be independent of the limited strength of the current from the batteries while retaining the sparking plug, soon led to the adaptation of the system of magneto-current generation to the production of sparks between two fixed points. In order to secure this, nothing more was needed than to give the current generated by the magneto-machine a sufficiently high pressure by the use of an induction coil This type of ignition device has been improved, especially by Ernst Eisemann & Co., Stuttgart.

Robert Bosch, also of Stuttgart, has succeeded in rendering the current generated by the magneto device suitable for application to high-speed automobile engines. But he does not use a separate induction coil to obtain a high-pressure current, producing it directly in the armature winding.

The advantages of this high-tension ignition system consist, in addition to the abolition of the induction coil with its numerous conductor wires, in the fact that the discharges between the points of the plug do not occur as short sparks, but as arcs of longer duration. The very hot arc thus formed insures regular ignition even with poor mixtures.

Beyond the one cable from the apparatus to the plug, no further leads are required for high-tension ignition. The discovery of faults in the insulation

Digitized by Google

is thereby much facilitated. The timing of the ignition is regulated directly by the adjustment of the apparatus, to which a movement through 40° is allowed, measured on its axis, and ignition is advanced or retarded according as the contact breaker is turned one way or the other. This possible movement of the contact breaker corresponds to an angular movement of the crankshaft of 50° in three-cylinder engines, 40° in four-cylinder engines, and about 27° in those having six cylinders.

Figs. 87 and 88 illustrate a high-tension ignition apparatus; fig. 89 is a diagram of connections for the apparatus in a four-cylinder engine; fig. 90 shows the plug used for high-tension ignition.

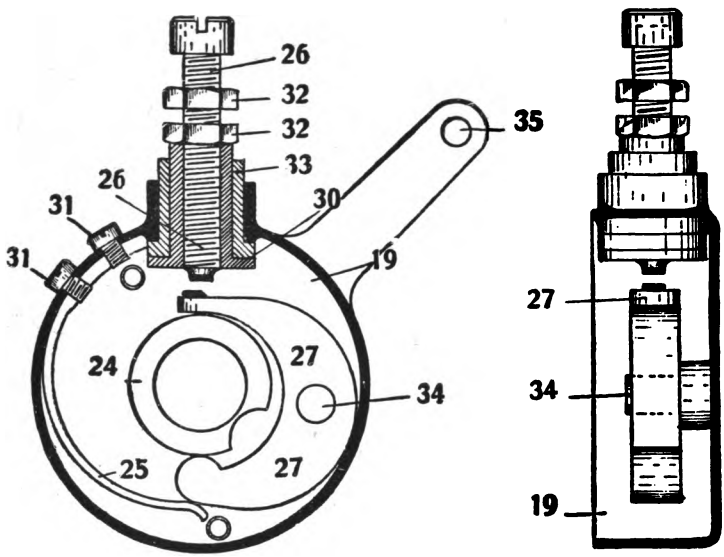

FIGS. 85 and 86.—Contact breaker of the Neckarsulmer Fahrradwerke.

19, Casing containing the device; 27, Contact piece pivoted on the centre 34; 26, Screw contact tipped with a platinum point; 25, Spring which forces the contact-lever 27 against the screwed contact piece; 35, Arm for turning the casing for throwing the ignition out of gear; 33, Hard rubber insulation; 32, Terminal nuts for clamping the wire conductor.

The great advantages of the make-and-break device, namely the high temperature and the beneficial effect it has in producing promptly widespread ignition of the charge, have stimulated efforts to make this form of ignition applicable also to automobile engines. The main obstacle, as already stated, lies in the rapid wear of the interrupter rod and the liability to leakage of the rocking ignition lever gland. By reducing the weight and shortening the travel of the rocking parts, and by increasing as much as possible the length of the bearing of the ignition lever shaft, it has been found possible to increase their life sufficiently for them to be used on automobile engines which do not run at too high a speed. There are to-day quite a large number of automobile manufacturers who always use make-and-break ignition.

Digitized by Google

Figs. 91 and 92 illustrate one of these devices with its magnet, made by Robert Bosch, Stuttgart.

In place of the rods shown in fig. 91, for operating the interrupter lever,

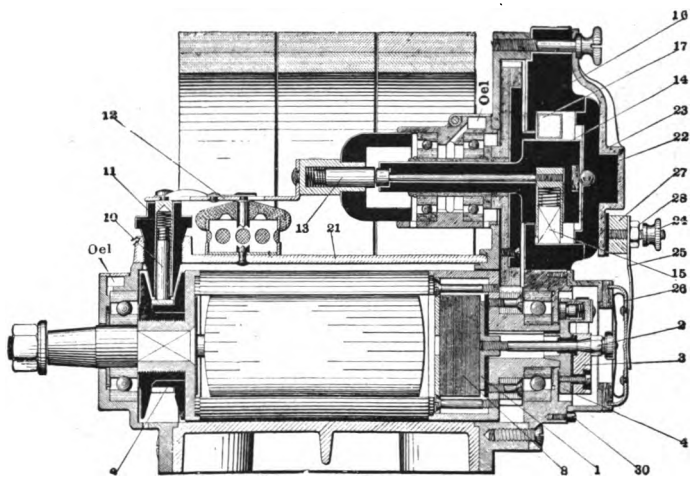

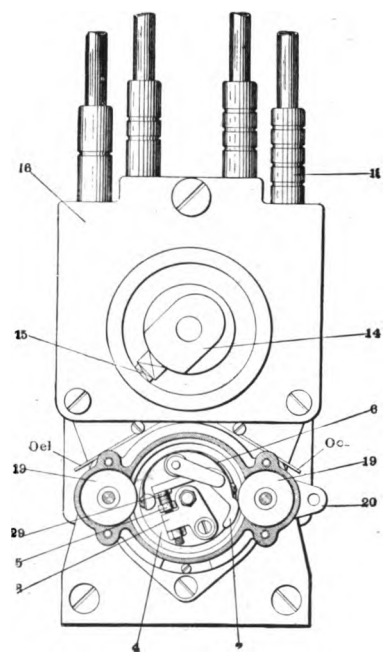

FIGS. 87 and 88.—Bosch high-tension ignition apparatus for three-, four-, and six-cylinder automobile engines.

1, Brass end plate on the primary winding; 2, Set screw fastening fixed contact and contact breaker plate; 3, Fixed contact; 4, Revolving contact breaker plate; 5, Long platinum screw contact point; 6, Contact breaker spring; 7, Movable contact breaker; 8, Condenser; 9, Slip ring; 10, Carbon brush for collecting current; 11, Brush holder; 12, Bridge connection; 13, Carbon for current transmission to distributor; 14, Rotary distributor or commutator; 15, Distributor carbon brush; 16, Distributor ring containing metal segments; 17, Metal segments let into distributor ring; 18, Lead terminals; 19, Fibre discs; 20, Lever for adjusting timing of ignition; 21, Dust-proof cover; 22, End cover; 23, Cover clamp; 24, Terminal for short circuit cable; 25, Spring for holding cover of contact breaker; 26, Cover of contact breaker; 27, Boss to which is fixed spring 25 by screw and nut 28; 29, Short platinum screw contact; 30, Stop to limit adjustment movement of contact breaker.

it is usual now to employ vertical cam-shafts driven from the lay-shaft by worm or bevel gearing, having at their upper ends suitable cams which work the interrupter levers arranged horizontally in the cylinder head. By this

Digitized by Google

means the working is rendered much easier. The magnets supplied by Bosch for this quick-acting breaking device are shown in fig. 92.

Another method of breaking circuit was introduced in America in the

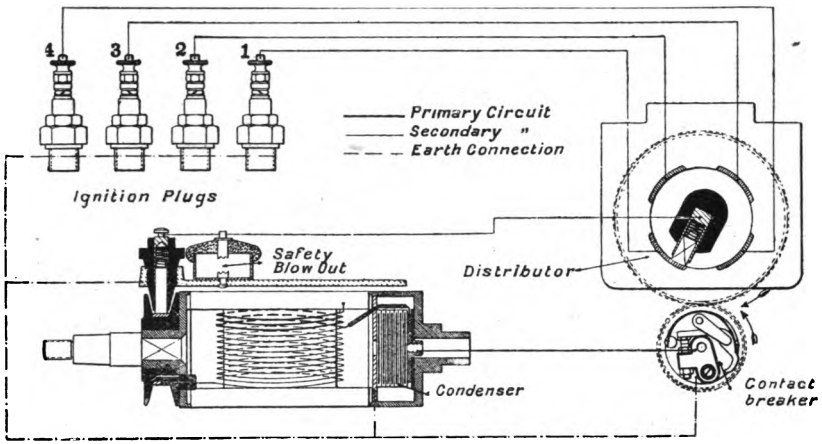

FIG. 89.—Diagram of connections of a high-tension ignition apparatus for a four-cylinder engine.

middle of the 'nineties. The break of contact was practically made by a horizontal ignition lever inside the cylinder, worked from within the working cylinder itself. The action took place at the correct instant, that is to say, shortly before the piston reached the end of its stroke; all rods were abolished,

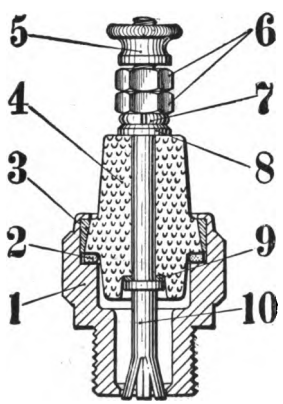

FIG. 90.—Plug for Bosch high-tension ignition.

1, Screwed plug.
2, Packing.
3, Conical ring for holding insulator.
4, Steatite insulator.
5, Terminal screw for the lead.
6, Nuts for holding the current-carrying pin in place.
7 and 8, Washers.
9, Packing.
10, Current conductor.

as was also the gas-tight gland of the interrupter lever. The speed of the piston shortly before reaching the dead-point is, it is true, but small, and the occurrence of misfire when the engine is working at a very low speed, was not improbable. Experience, however, proved that with the smaller engines these difficulties could easily be overcome. In spite of the fact that with this method of ignition the advantage had to be abandoned of retarding ignition

Digitized by Google

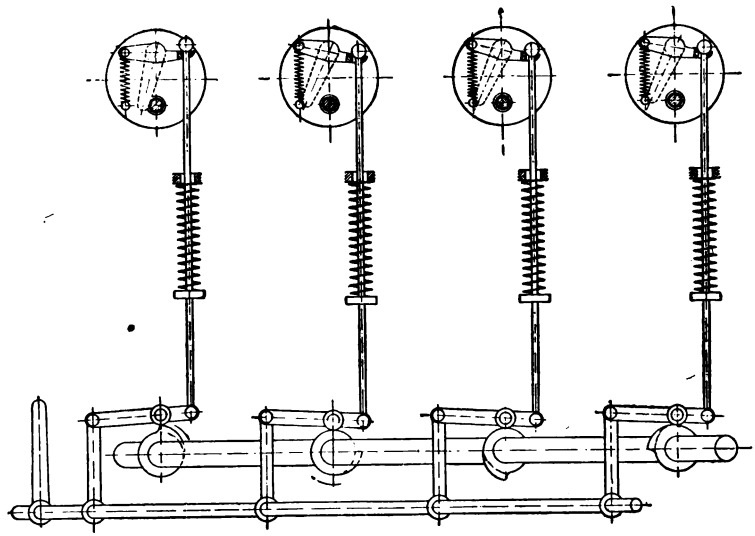

FIG. 91.—Adjustable contact-breaking device by Robert Bosch, for a four-cylinder automobile engine.

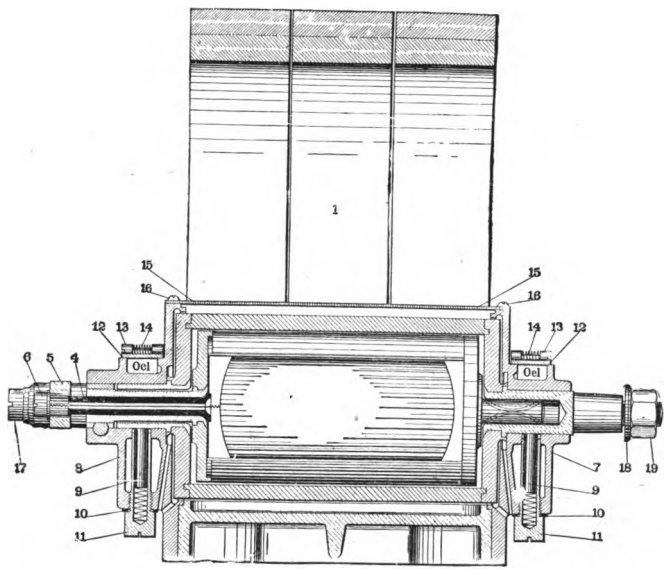

FIG. 92.—Bosch ignition apparatus, with rotary armature for high-speed engines with contact-breaking device.

1, Double magnet; 2, Armature; 3, Insulating screws; 4, Current collector; 5, Current collector screws; 6, Front washer; 7, Back plate; 8, Felt core; 9, Leather disc; 10, Core holder; 11, Carbon brushes; 12, Brush holders; 13, Lubricating cover; 14, Screw for lubricating cover; 15, Spring for same; 16, Zinc cover plate; 17, Screw for same; 18, Washer of armature shaft; 19, Nut for armature shaft.

LIBRARY OF THE UNIVERS
Digitized by Google

while the engine was running, and by these means ensuring the most favourable consumption of the fuel, "piston contact ignition" has been fairly widely adopted, and, owing to its great simplicity, is still employed. The Maurer Union, Nuremberg, are among those manufacturers who have paid special attention to the development of this particular method which they use to a considerable extent on their automobile engines.

There remains to be mentioned a still more recent system of make-and-break ignition, which combines the advantages of the plug with the older

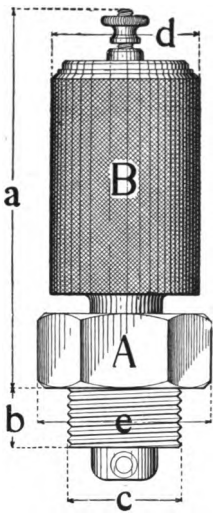

FIG. 93.

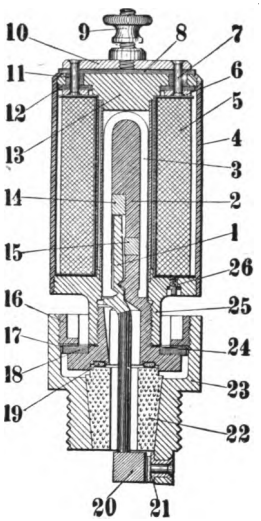

FIG. 94.

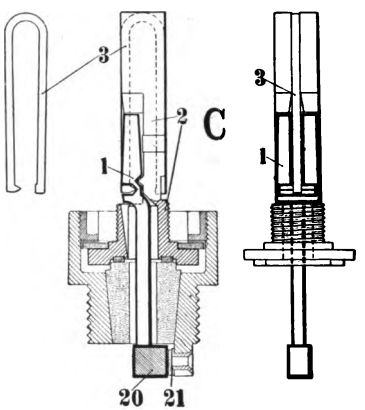

FIG. 95.

Bosch magneto-ignition plug (Honold system). Elevation ; vertical section ; details of connections.

1, Contact-breaking lever ; 2, Pole piece ; 3, U-shaped spring ; 4, Iron casing ; 5, Magnet coil winding ; 6, Current conductor ring ; 7, Current conducting pin ; 8, Mica disc ; 9, Thumb screw for wire lead ; 10, Current conductor plate ; 11, Insulator ; 12, Mica ring ; 13, Upper magnet cap ; 14, Brass ring ; 15, Brass distance piece ; 16, Screwed ring ; 17, Centering washer ; 18, Mica plate ; 19, Main insulating ring ; 20, Contact to breaking lever ; 21, Contact on plug ; 22, Steatite core ; 23, Lower magnet cap.

break devices. Attempts were made about six years ago to utilise electricity as a means of breaking contact, in addition to its employment for the actual formation of sparks, using in one well-known form an iron core wound with wire, the iron forming a magnet when the current flows through the wire. The power so generated operates the ignition lever or point situated inside the combustion chamber.

The firm Robert Bosch has also taken up the manufacture of one of these ignition devices, and some time ago introduced it under the name of the Bosch magneto-plug-ignition, Honold system. This is shown in figs. 93 to 95. The plug is operated by a magnet of the usual type.

Digitized by Google

The conductors for the electric current and their connections form a very important part of electric ignition; the connections often need to be soldered, and must be capable of withstanding great vibration. Copper wire wound with one wrapping of insulation is not suitable for these conductors. They are subject to repeated bendings, and the insulation quickly becomes damaged; the wire often breaks inside the insulation, the circuit is then broken, and as frequently no outside defects are evident, it is difficult to locate the trouble. These imperfections are best prevented by the use of cables, in which the connection is not dependent upon one single stiff wire, but is formed of a number of very thin wires wound together, and rubber insulated. Such

FIG. 96. FIG. 97.

Cable eye of the Apparatenbauanstalt Fischer, Frankfurt.

Fig. 96 shows the manner of fixing the cable in the eye.
Fig. 97 shows the connection complete.

cables are very flexible, and are also suitable for high pressures. With cables, however, the difficulty lies in the terminal connections, and special eyes are necessary. Figs. 96 and 97 show a cable terminal-eye.

From the above description of the development of electric ignition, it will be seen that difficulties have not been wanting in the work of improving this important adjunct to internal combustion engines. The latter have not been simplified by the improved methods of electric ignition, and finality of improvement has by no means been reached.

Digitized by Google

CHAPTER VI.

EXAMPLES OF STATIONARY PETROL AND ALCOHOL ENGINES.

PETROL has excellent properties as a fuel for internal combustion engines, but the great risk of fire its use entails, its high price, and the low degree of compression which is possible for the charge, have long stimulated research for some other kind of fuel. As pointed out in the third chapter, the efforts made in this direction have been successful. Crude benzol, "ergin," and the mixture of both with alcohol, have resulted in fuels which can not only replace petrol, but are even much superior to it for certain purposes. In stationary engines and portable engines, petrol is now seldom used, except in the case of small installations.

Crude benzol, "ergin," and alcohol are not so volatile that the formation of an explosive mixture can be procured by the simple spraying method as is the case with petrol. With the former the mixture of fuel spray and air must be passed, as soon as it is formed, through a heated chamber so that the spray may be converted into vapour and the mixture with air be rendered more complete.

The heating medium for such chambers is generally a portion of the hot exhaust gases. This method of heating renders necessary the starting of the engine with some other more volatile fuel. The engine must be run with this fuel until the required temperature is reached; the power developed by the engine by the heated and therefore less dense charge, will be reduced. The simplicity and reliability of this method is, however, so great that it is frequently adopted. It is only of disadvantage when the warming up is carried further than is necessary.

In the construction of engines which have to work economically with benzol, "ergin," and alcohol, the warming device needs to be made adjustable to suit exactly the volatility of the fuel used.

Among the first manufacturers who applied devices utilising exhaust gases to their liquid-fuel engines, were Messrs Gebr. Körting, Hanover. Figs. 98 to 102 show one of these engines, which can also be worked with paraffin.

Digitized by Google

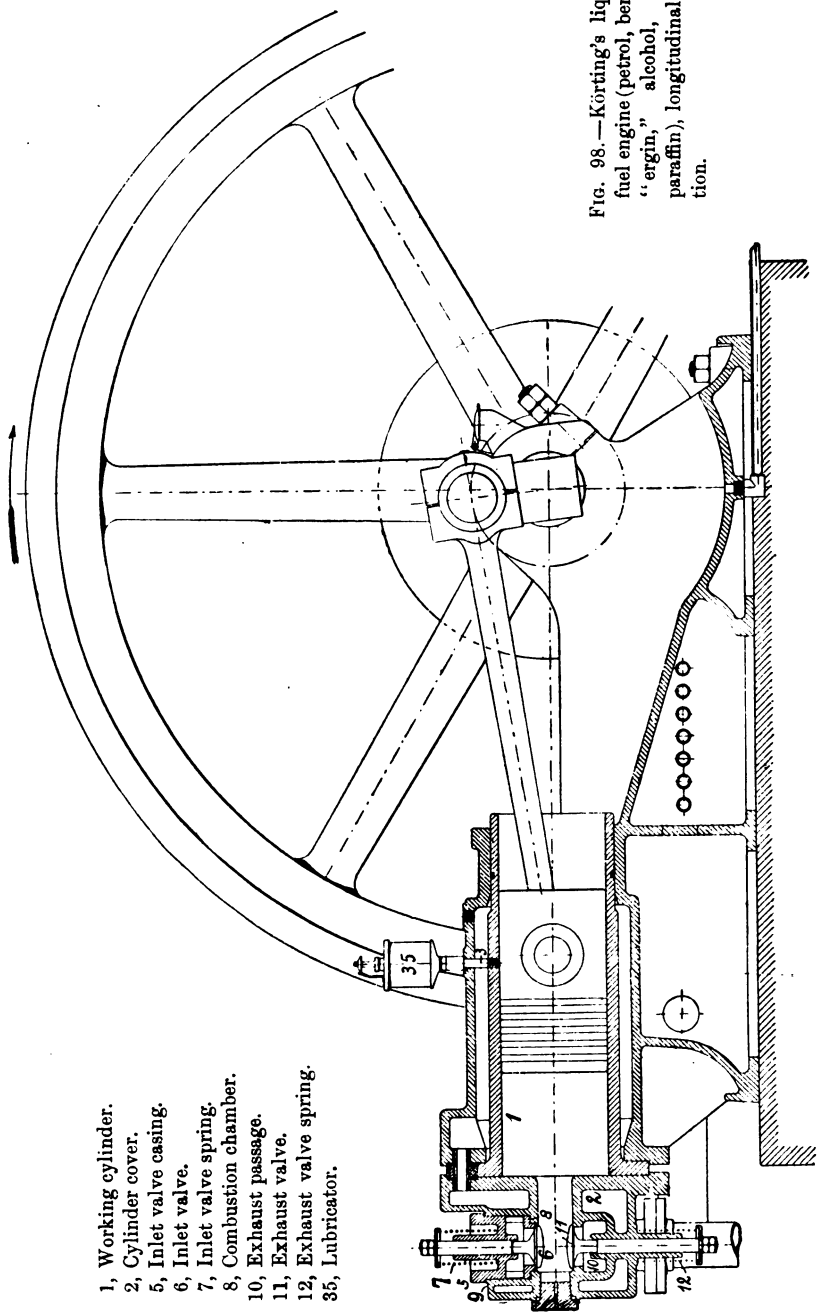

FIG. 98.—Körting's liquid-fuel engine (petrol, benzol, "ergin," alcohol, and paraffin), longitudinal section.

Digitized by Google

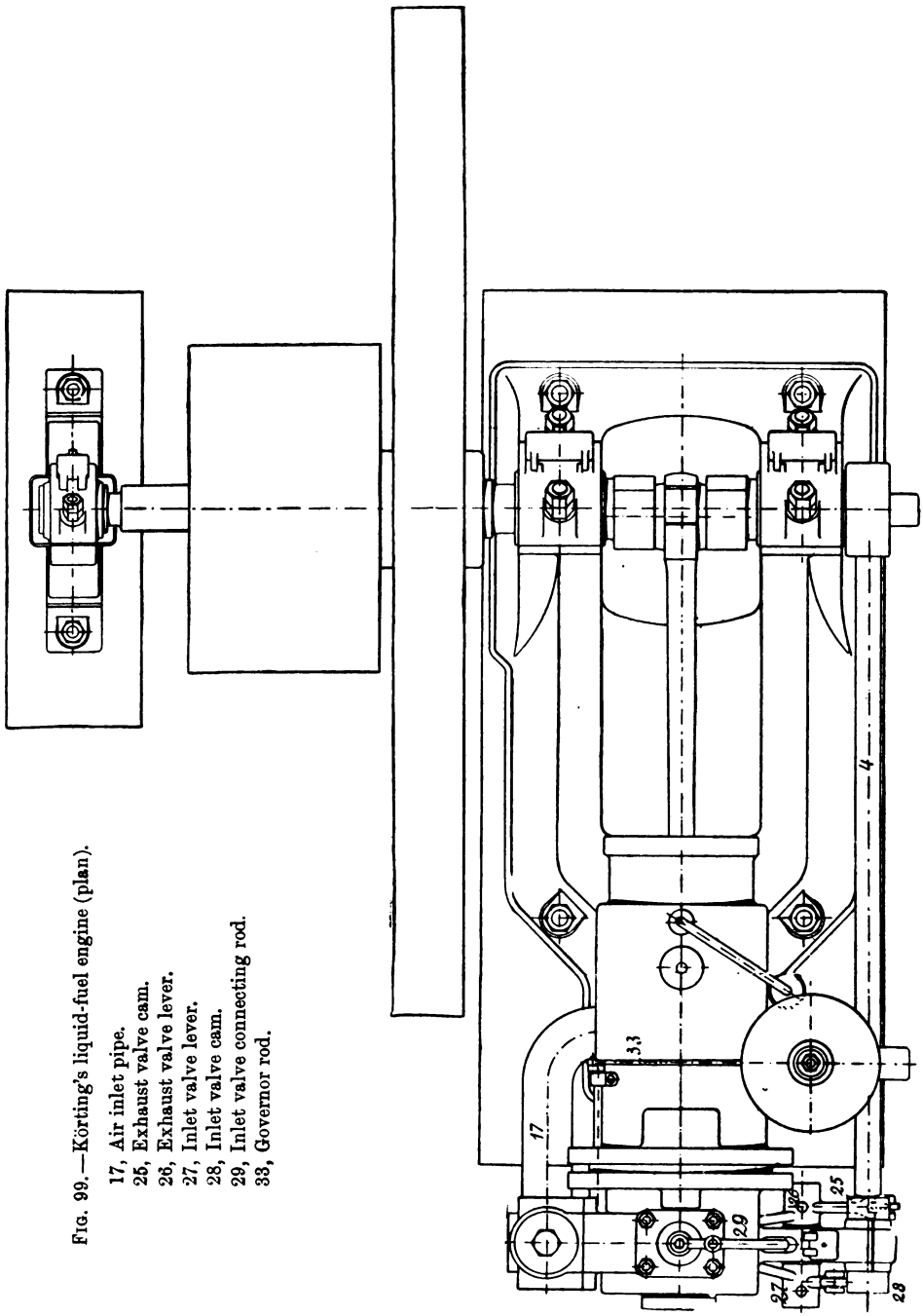

FIG. 99.—Körting's liquid-fuel engine (plan).

17, Air inlet pipe.
25, Exhaust valve cam.
26, Exhaust valve lever.
27, Inlet valve lever.
28, Inlet valve cam.
29, Inlet valve connecting rod.
33, Governor rod.

Digitized by Google

2, Cylinder cover with valve chest.
5, Inlet valve chest.
6, Inlet valve.
7, Inlet valve spring.
10, Exhaust passage.
11, Exhaust valve.
12, Exhaust valve spring.
16, Cover of fuel-heating chamber.
21, Entrance of exhaust gases used for heating the chamber.
22, Valve for regulating heating.
26, Exhaust valve lever.
27, Inlet valve lever.
28, Inlet valve cam.
29, Connecting rod for opening inlet valve.
31, Governor spindle.
32, Regulator crank.
33, Governor rod.
34, Throttle valve for governing.

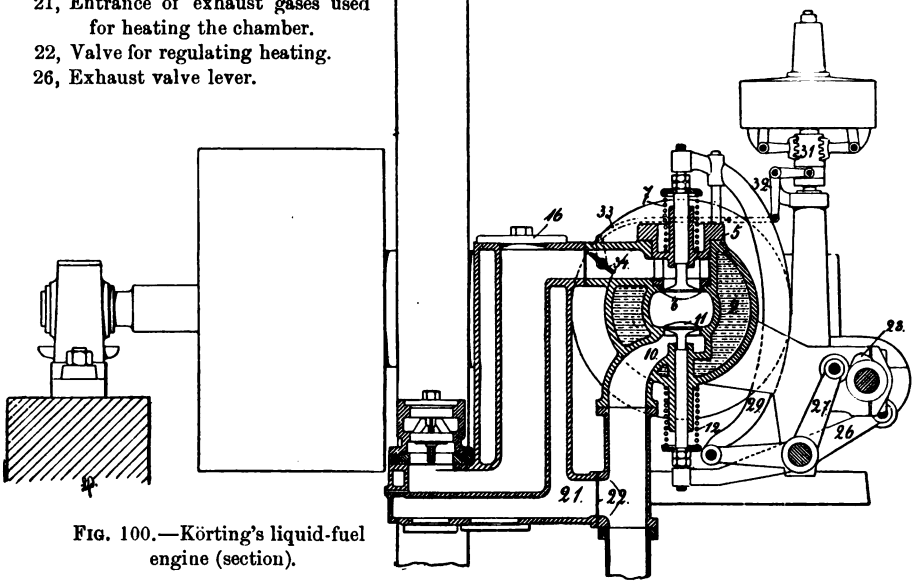

FIG. 100.—Körting's liquid-fuel engine (section).

1, Striker for the arm on the spindle of the magneto armature.
2, Arm on the armature spindle.
4, Lead.
7, Interrupter or trip-rod.
8, Lug by which ignition can be varied.
10, Spring for drawing back the armature.
11, Lever on the armature spindle.
13, Exterior arm of interrupter.
14, Disc on the side shaft which carries the stop 1.

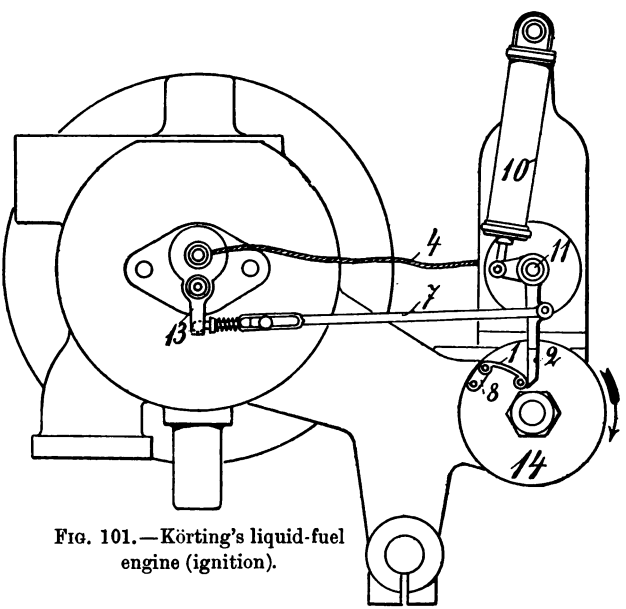

FIG. 101.—Körting's liquid-fuel engine (ignition).

Digitized by Google

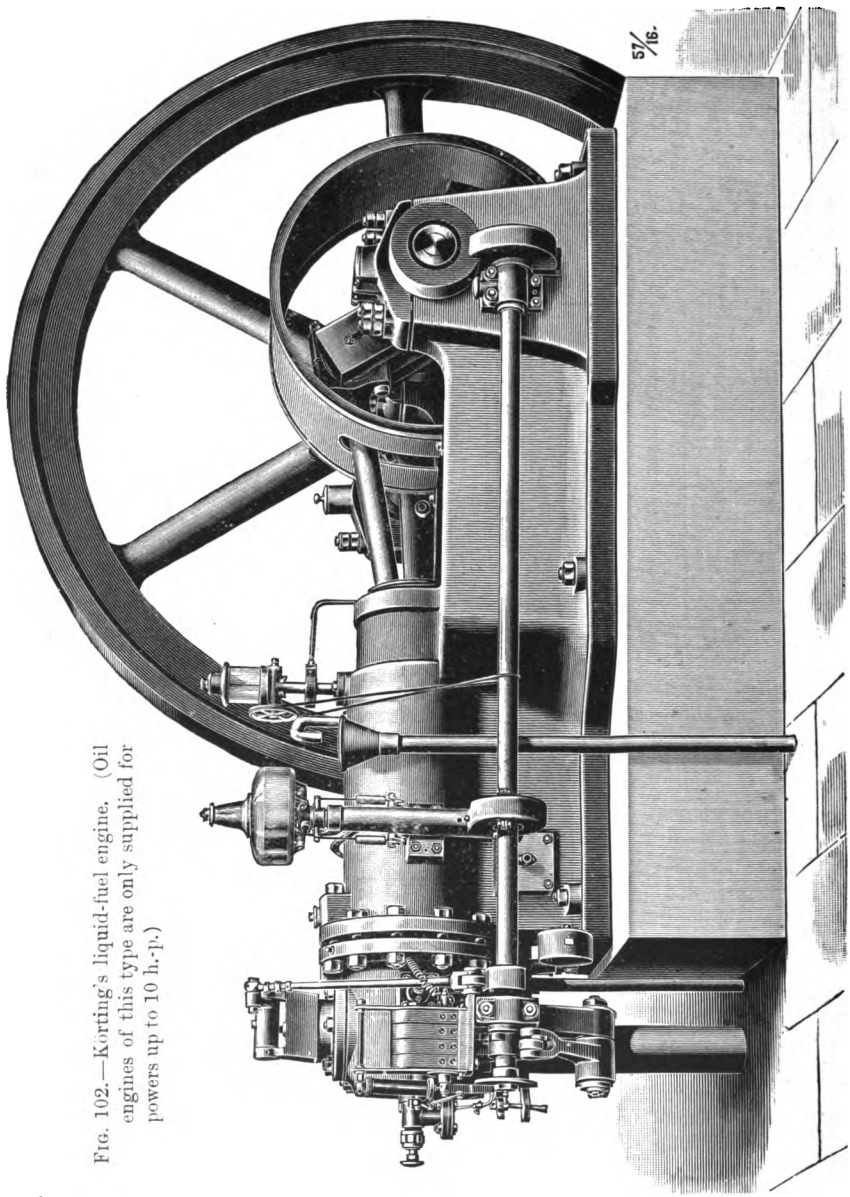

FIG. 102.—Körting's liquid-fuel engine. (Oil engines of this type are only supplied for powers up to 10 h.-p.)

Fuel consumption—

Using petrol, 0·25 to 0·4 kg. (·55 to ·88 lb.) per h.-p. hour.

Using petrol *plus* 92 per cent. alcohol, 0·37 to 0·5 kg. (·81 to 1·1 lbs.) per h.-p. hour.

Digitized by Google

Details of Körting Engines,

using petrol, benzol, alcohol, and paraffin.

The engines are built, for petrol, up to 35 h.-p. ; for benzol and alcohol, up to 50 h.-p. ; for paraffin, up to 10 h.-p. inclusive.

Horse-power.	2	3	4	6	8	10	12	14	16	20	25	30	35	40	50
Price of petrol, benzol, alcohol, or paraffin engines for ordinary purposes . . . . . £ s.	110 0	121 0	143 0	150 15	187 15	198 5	232 15	260 5	281 15	310 0	338 10	389 0	445 0	517 15	602 10
Price of same for electrical purposes ,,	111 5	122 0	144 5	154 0	192 0	202 0	237 15	265 5	286 15	320 0	348 15	402 15	460 0	536 0	620 10
Extra price for outside bearing and foundation bolts . . . . ,,	..	..	..	..	2 4	2 4	3 17	3 17	3 17	3 19	5 5	7 0	7 0	9 8	9 10
Approximate weight of the engines:															
For ordinary purposes, net cwts. qrs.	10 2	14 2	19 0	23 2	38 0	46 0	59 3	72 2	74 3	78 3	90 0	113 1	128 2	166 2	220 4
,, ,, ,, gross ,, ,,	17 1	21 1	26 3	32 1	48 3	57 0	67 4	81 0	83 2	87 3	101 2	126 1	142 3	180 3	235 2
,, electrical ,, net ,, ,,	12 1	15 2	20 3	26 3	45 3	54 0	63 2	76 3	78 2	92 3	107 2	133 3	148 0	196 0	252 4
,, ,, ,, gross ,, ,,	19 0	22 0	28 1	35 2	56 1	65 1	71 3	85 2	87 1	101 2	119 0	146 2	162 1	210 1	256 0
Normal speed: revs. per minute.	260	260	240	240	220	220	200	200	200	190	190	170	170	160	160
Approximate length of engines, ft. ins.	5 1	5 6	6 0	6 $5\frac{1}{2}$	7 2	8 0	8 10	9 5	10 1	11 7	12 2	12 4	13 10	15 4	16 1
,, width ,, ,, ,,	2 8	2 9	3 1	3 7	5 3	5 8	6 5	6 8	6 11	7 5	7 9	8 0	8 4	8 7	9 5
,, height ,, ,, ,,	4 7	4 10	4 11	5 2	5 7	6 1	6 4	6 7	6 9	6 11	7 0	7 4	7 8	8 6	8 8
Diameter of flywheel for ordinary purposes . . . . ,, ,,	3 4	4 0	4 4	4 9	5 9	6 1	6 10	7 6	7 6	7 11	8 0	8 8	9 2	9 9	10 6
Diameter of flywheel for electrical purposes . . . ,, ,,	4 0	4 4	4 9	5 1	6 1	6 5	7 1	7 9	7 9	8 4	8 6	9 1	9 8	10 4	11 0
Diameter of normal belt-pulley ,, ,,	1 4	1 4	1 8	1 8	2 0	2 0	2 8	2 8	2 8	3 4	3 4	3 11	3 11	4 3	4 3
Rim ,, ,, ins.	$7\frac{3}{8}$	$7\frac{3}{8}$	$10\frac{3}{16}$	$10\frac{3}{16}$	$11\frac{13}{16}$	$13\frac{3}{4}$	$14\frac{1}{8}$	$16\frac{1}{8}$	$18\frac{1}{2}$	$18\frac{1}{2}$	$21\frac{5}{8}$	$25\frac{7}{16}$	$29\frac{1}{8}$	$29\frac{1}{2}$	$33\frac{1}{2}$
Width of belt . . . . ,,	$2\frac{3}{4}$	$3\frac{1}{2}$	4	$4\frac{11}{16}$	$5\frac{1}{2}$	$6\frac{1}{2}$	$6\frac{1}{2}$	$7\frac{7}{16}$	$8\frac{5}{8}$	$8\frac{5}{8}$	$10\frac{3}{16}$	$11\frac{13}{16}$	$13\frac{3}{4}$	$13\frac{3}{4}$	$15\frac{3}{4}$
Price of normal belt-pulley . £ s.	..	..	..	..	..	..	..	..	..	14 15	16 0	25 0	28 10	33 10	37 10
Price of cast-iron base plate . ,,	5 15	6 0	7 10	8 15	..	..	..	..	..	..	..	..	..	..	..
Weight of ,, ,, cwts. qrs.	3 0	3 1	4 0	4 4	..	..	..	..	..	..	..	..	..	..	..

Digitized by Google

Stationary Liquid-fuel Engines working with Petrol, Benzol, Paraffin, Alcohol, "Ergin," etc., built by the Gasmotorenfabrik Deutz.

Horizontal slow-speed engines are illustrated in figs. 103 to 109. The engines can work with petrol, benzol, alcohol, "ergin," and paraffin. The engines have to be tested thoroughly for each kind of fuel. The formation of the explosive mixture is effected by means of pumps and an atomiser, or by means of a vaporiser. Cooling is carried out by water circulation or by evaporation. When working with "ergin," alcohol, and paraffin, the engine must be started with petrol.

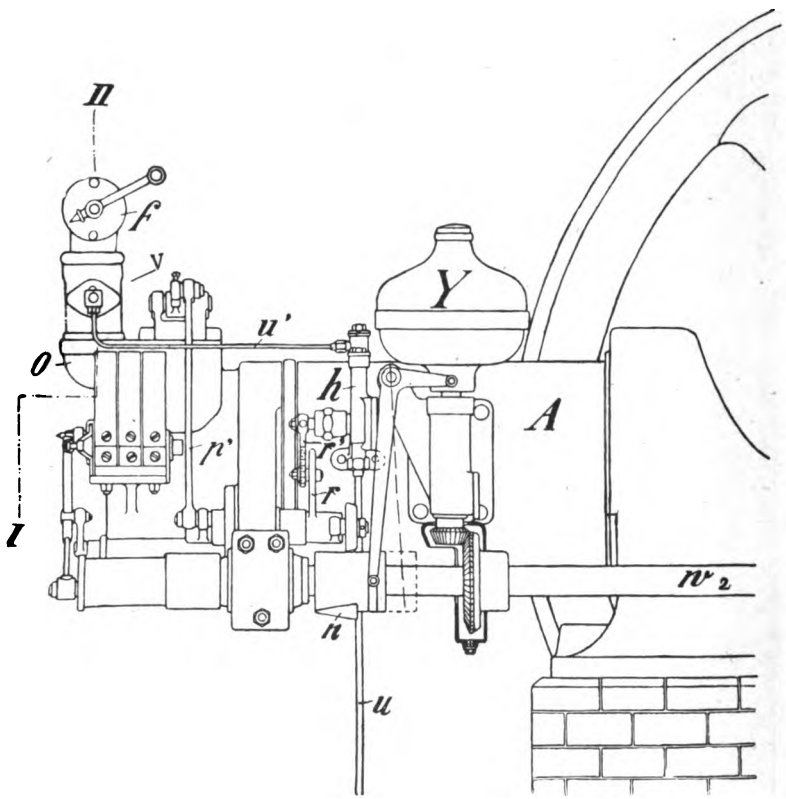

FIG. 103.—Deutz slow-speed liquid-fuel engine, in which the mixture is formed by means of a pump and an atomiser (side elevation).

A, Working cylinder; *h*, Fuel pump; *u u'*, Fuel pipe; *o*, Mixing chamber; *f*, Air regulation; *v*, Chamber for the atomiser; *p'*, Inlet valve rod; *n*, Inlet cam; *r r'*, Lever for working the fuel pump; w_2, Lay shaft.

Digitized by Google

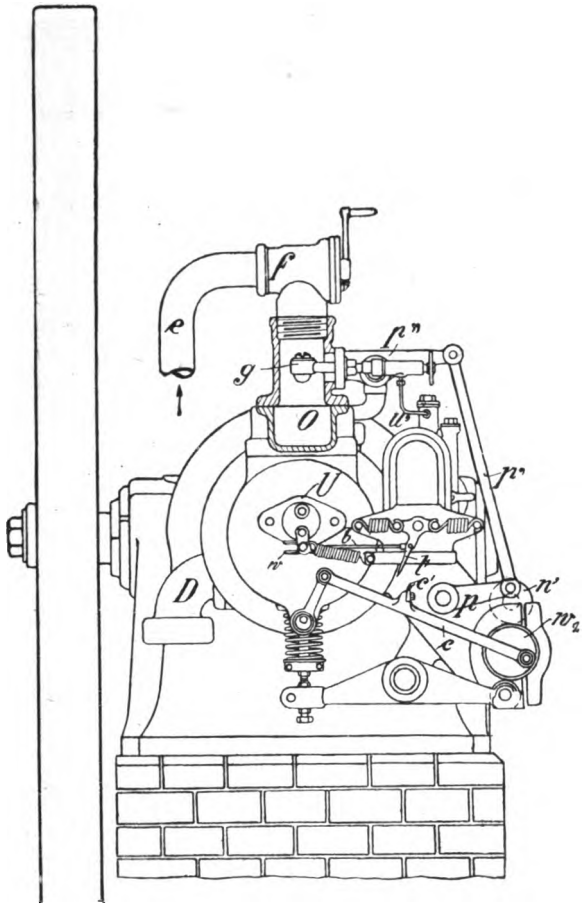

FIG. 104.—Deutz liquid-fuel engine. (Section I, II of fig. 103.)

e, Air inlet.
f, Air regulating cock.
g, Fuel atomiser.
o, Mixing chamber.
p, *p''*, Inlet valve lever.
p', Inlet valve rod.
u', Fuel pipe.
D, Exhaust flange pipe.
c, *c'*, *t*, Rods connected to magneto.
b *w*, Trip rod.
U, Ignition mounting flange.
n', Pump lever roller.
w_2, Ignition rod disc crank.

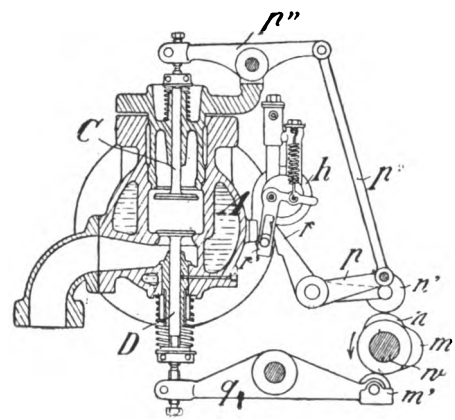

FIG. 105. — Deutz liquid-fuel engine. (Section through valves in engines with pump and atomiser.)

p, *p''*, and *p'*, Inlet valve levers and rod.
C, Inlet valve.
n, Inlet cam.
D, Exhaust valve.
m, Cam for exhaust valve.
m', *q*, Exhaust valve lever.
r, *r'*, Pump lever.
w, Lay shaft.

Digitized by Google

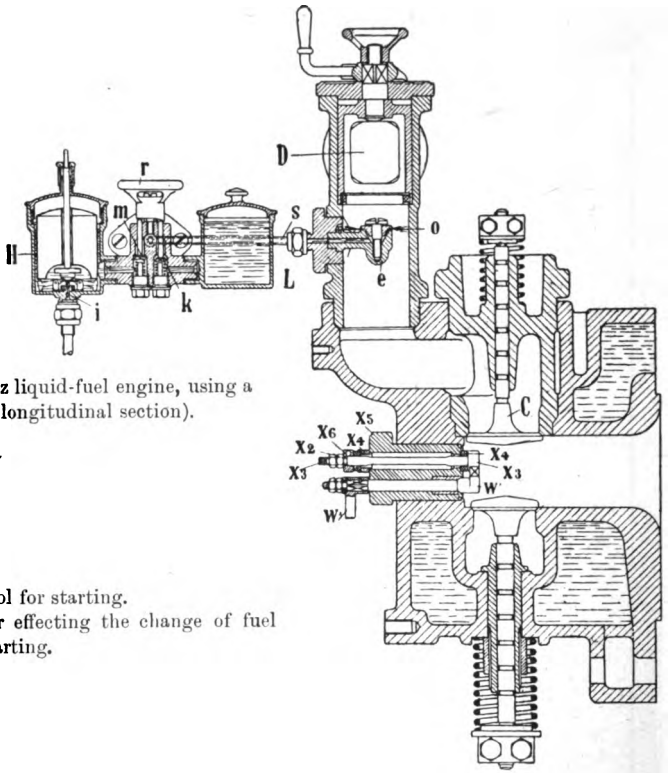

FIG. 106.—Deutz liquid-fuel engine, using a vaporiser (longitudinal section).

H, Float chamber.
i, Float valve.
e, Vaporiser.
o, Outlet for fuel.
s, Fuel pipe.
D, Air inlet.
L, Holder for petrol for starting.
m, *k*, *r*, Device for effecting the change of fuel after starting.

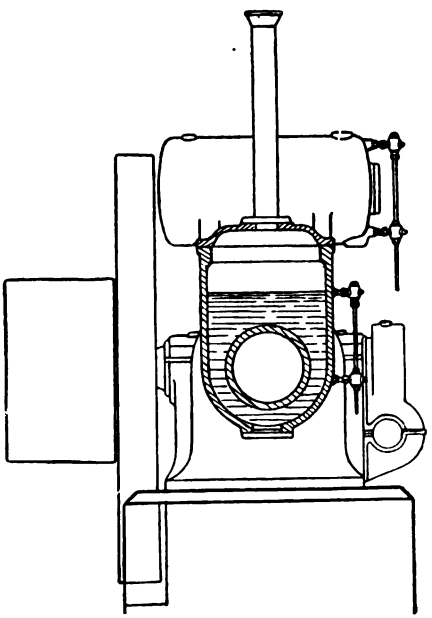

FIG. 107.—Deutz liquid-fuel engine fitted with evaporation cooling jacket. (Section.)

The cooling jacket of the cylinder is widened out at top and is closed with a cover. The water level is shown by a gauge. All the water is evaporated and the steam formed escapes into the atmosphere.

Digitized by Google

FIG. 108.—Deutz liquid-fuel engine. Details of ignition.

W, Exterior arm on interrupter.
W′, Interrupter arm.
X, X_2, X_3, Current conductors.
X_4, Mica insulation.
X_5, Flange for mounting.
X_6, Terminal of conductor.

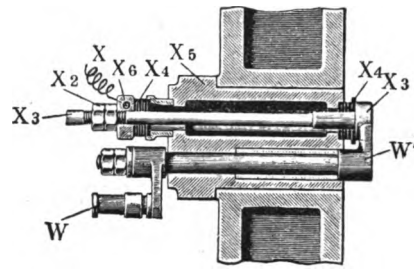

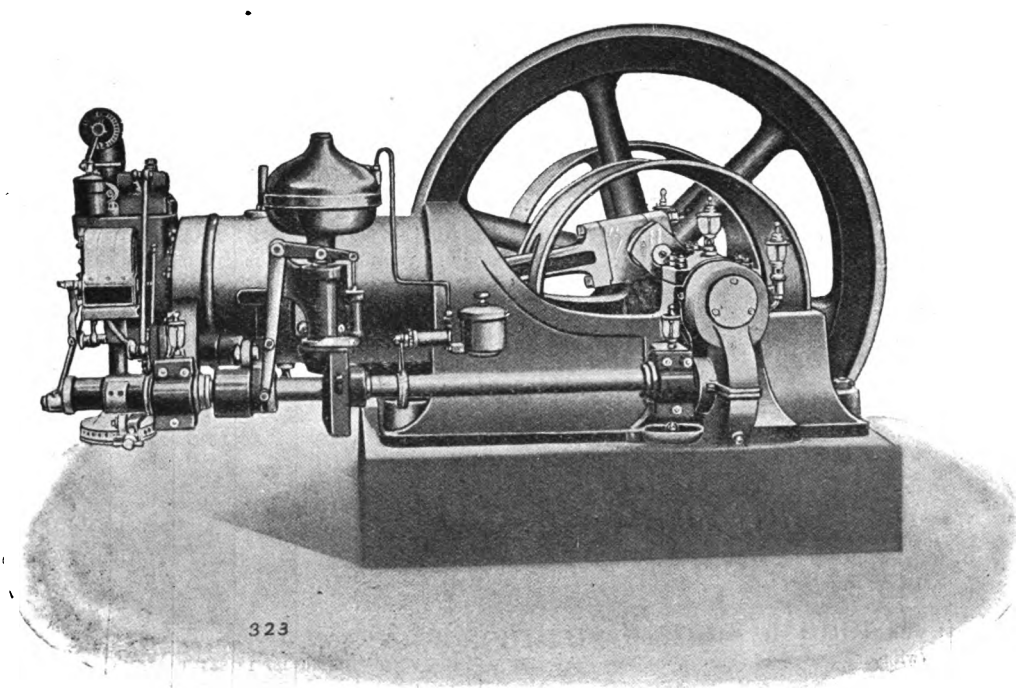

FIG. 109.—Deutz liquid-fuel engine with vaporiser.

Digitized by Google

Details of Deutz Liquid-Fuel Stationary Engines,

in sizes from 4 *to* 20 *h.-p.*

The engines of from 20 to 30 h.-p. are built of different type.

Designation of size.	*b*	*d*	*e*	*g*	*h*	*k*	*m*
Maximum horse-power { Petrol, benzol, paraffin	4·25	6·25	8·25	10·7	14	18	23
{ Alcohol, "ergin"	4·8	6·8	9·00	11·5	16	20	25
Price of engine for ordinary purposes, with fuel tank, silencer, attendant's tools, oil-can, spare parts, and belt-pulley . . . . . £ *s.*	85 0	105 0	122 10	160 0	177 10	227 10	275 0
Price of foundation accessories for masonry foundations . . . . . ,,	0 15	1 0	1 5	1 5	2 0	2 10	3 0
Price of cast-iron foundation frame . . ,,	5 10	6 10	7 5	8 0	10 0	11 0	13 0
Extra for evaporation cooling . . . ,,	7 10	7 10	10 0	10 0	12 10	15 0	15 0
Speed: revs. per minute	350	350	330	300	280	250	230
Diameter of belt-pulley . . . . . ins.	11 1/16	13 3/4	15 1/2	19 1/16	23 5/8	33 7/16	39 3/8
Rim ,, ,, ... ,,	8 1/4	9 1/16	11 3/8	13	13 3/4	15 15/16	16 1/2
Width of belt . . . . . ,,	3 1/16	4 1/16	5 1/2	6 1/2	6 1/16	7 7/16	7 7/8
Approximate weight of engine, { net cwts. qrs.	12 1	16 0	21 0	24 2	37 1	49 1	67 0
{ gross ,, ,,	15 3	20 0	25 1	30 2	44 1	57 0	76 3
Extra with engine for electric driving without belt-pulley:							
1. With heavy flywheel and outside bearing:							
(a) with foundation accessories for masonry foundations . . . . . £ *s.*	9 0	9 10	10 0	10 10	11 10	19 0	21 0
(*b*) with cast-iron floor frame . . ,,	12 0	12 10	14 0	14 0	15 10	23 10	25 10
2. With two flywheels . . . . . ,,	9 0	9 10	10 0	10 10	11 10	19 0	21 0
Engine with one flywheel:							
Diameter of belt flywheel . . . ft. ins.	4 3	4 7	4 11	5 3	5 11	6 11	7 7
Belt speed . . . . . ft. per sec.	76	83	85	82	85·6	89	90
Width of belt . . . . . ins.	2 5/16	2 3/4	3 1/8	3 1/16	4 5/16	4 1/16	5 1/2
From centre of cylinder to centre of outside bearing: without belt-pulley . . . ins.	24 3/4	28 7/16	29 7/8	31 1/2	35 7/16	39 3/8	44 1/8
With belt-pulley . . . . . ,,	29 1/2	34 1/4	37	40 1/8	45	49 5/8	55 1/8
Engine with two flywheels:							
Diameter of belt flywheel . . . ft. ins.	3 1	3 7	3 11	4 3	4 7	5 3	5 11
Belt speed . . . . . ft. per sec.	56	66	68	66	66	68·9	70·6
Width of belt . . . . . ins.	3 1/8	3 1/2	3 1/16	4 1/16	5 1/2	6 1/4	7 1/16
Price of engine for power transmission, with two flywheels, evaporation cooling (without silencer) . . . . . £ *s.*	90 0	110	130	167 10	187 10	235 0	282 10
Engine for power transmission:							
Diameter of belt flywheel . . . ft. ins.	2 6	2 8	2 9	2 11	2 11	3 3	3 7
Rim ,, ,, ... ins.	6 1/2	6 3/8	7 1/8	7 1/16	8 1/16	10 5/16	12 1/4
Width of belt . . . . . ,,	2 3/4	2 3/4	3 1/8	3 1/2	3 1/16	4 1/16	5 1/2
Belt speed . . . . . ft. per sec.	45	49	46·6	46	42·8	42·7	42·7

Digitized by Google

Deutz Stationary Vertical High-speed Engine, with Crank-shaft below, in sizes from 1·25 to 36 h.-p.

These engines are on the lines of automobile engines; they are built with one, two, and four cylinders, and are fitted with the vaporising device shown in fig. 106.

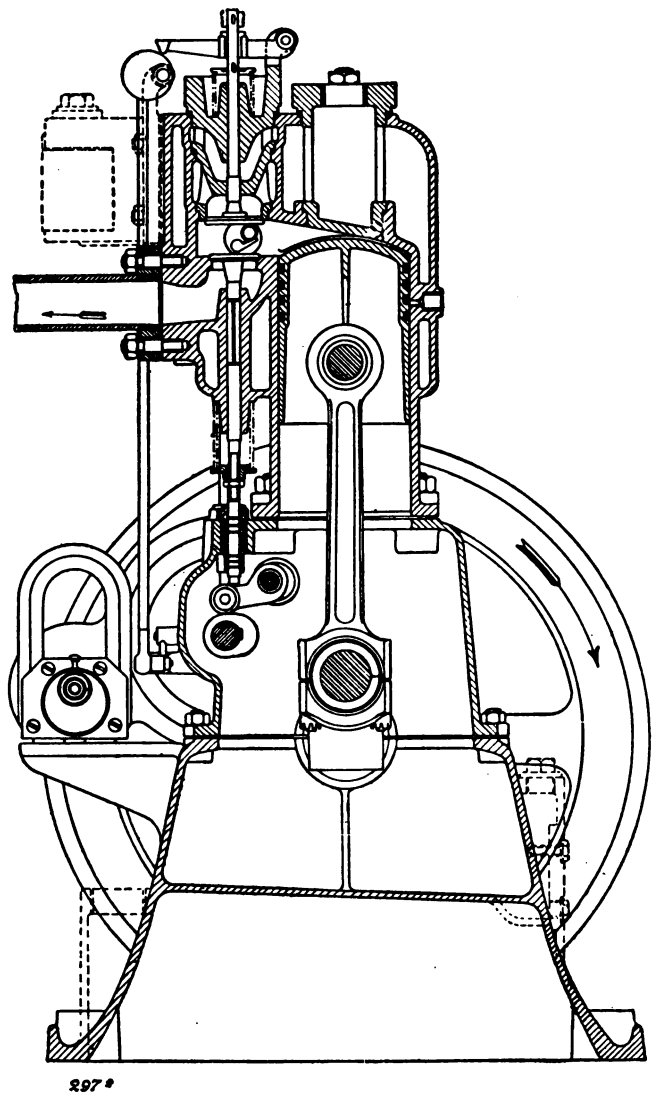

FIG. 110.

Digitized by Google

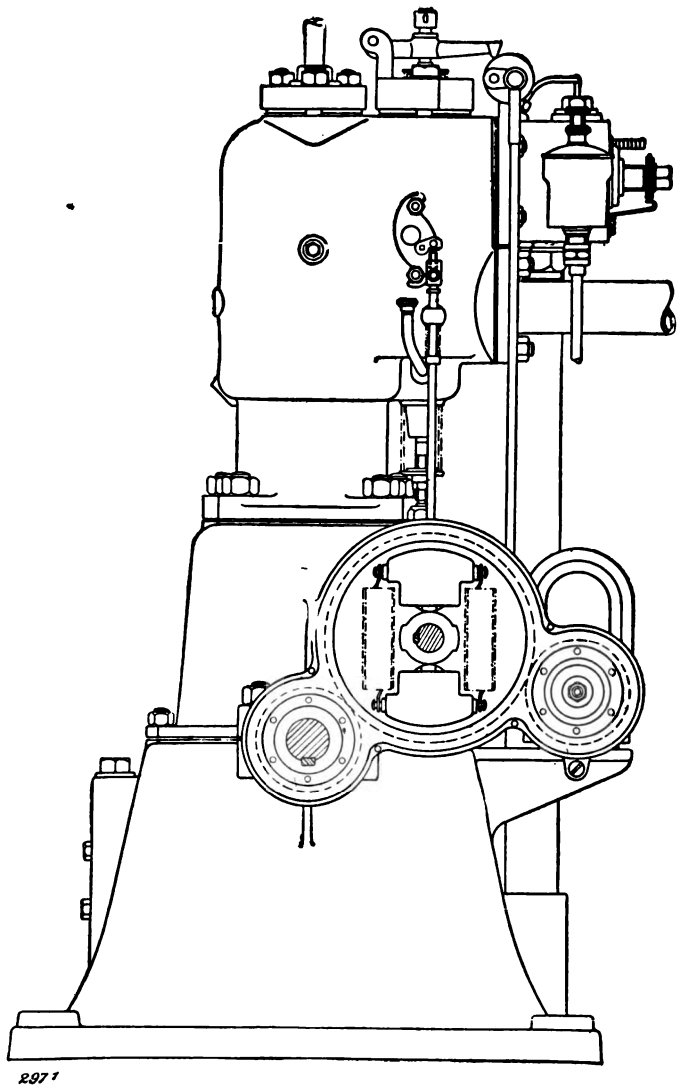

FIG. 111.

Digitized by Google

Details of Deutz Liquid-Fuel Engines,

illustrated in figs. 110 *and* 111.

Designation of size.		One-cylinder engines.			Two-cylinder engines.			Four-cylinder engines including outside bearing.	
		a	*g*	*h*	*gz*	*hz*	*kz*	*h2z*	*k2z*
Maximum power	h.p.	1·25	4·5	6	9	12	18	25	36
Price of engine for power or lighting, with fuel tank, silencer, attendant's tools, oil-can, spare parts, belt-pulley, and starting handle	£ *s.*	43 15	75 0	85 0	140 0	163 15	200 0	325 0	400 0
Price of foundation accessories for masonry foundation	,,	0 10	1 5	1 10	1 5	1 10	2 0	2 5	3 0
Speed: revs. per minute		750	660	600	660	600	475	600	475
Diameter of belt-pulley	ins.	$7\frac{7}{8}$	$11\frac{13}{16}$	$13\frac{3}{4}$	$16\frac{1}{2}$	$18\frac{7}{8}$	$23\frac{5}{8}$	$18\frac{7}{8}$	$23\frac{5}{8}$
Width ,, ,,	,,	$3\frac{1}{2}$	$5\frac{1}{8}$	$5\frac{7}{8}$	$6\frac{11}{16}$	$8\frac{1}{4}$	$10\frac{5}{8}$	$16\frac{1}{8}$	$20\frac{13}{16}$
,, of belt	,,	$1\frac{9}{16}$	$2\frac{5}{16}$	$2\frac{3}{4}$	$3\frac{1}{8}$	$3\frac{15}{16}$	$5\frac{1}{8}$	$7\frac{7}{8}$	$10\frac{3}{16}$
Approximate weight of engine (with flywheel and belt-pulley)	net cwts. qrs.	2 3	5 3	7 1	8 0	11 1	15 3	19 3	29 2
Without silencer	gross ,, ,,	3 1	6 3	8 3	9 2	13 1	17 3	22 2	33 2

Details of Swiderski Liquid-Fuel Engines,

illustrated in figs. 112 *to* 114.

Normal effective horse-power.			1	2	3	4	5	6	8	10	15
Price of complete engine, including spare parts and attendant's tools	£ *s.*	One-cylinder engine.	67 10	75 0	87 10	100 0	115 0	130 0	157 10	180 0	215 0
Price of foundation bolts and plates	,,		0 12	0 15	0 18	1 0	1 2	1 5	1 8	1 14	2 0
Speed: revs. per minute			360	340	330	300	270	250	240	230	220
Diameter of standard flywheel	ft. ins.		2 $5\frac{1}{2}$	2 $9\frac{1}{2}$	2 $11\frac{7}{16}$	3 $3\frac{3}{8}$	3 $7\frac{5}{16}$	4 $1\frac{3}{16}$	4 $5\frac{1}{8}$	4 11	5 3
Rim ,, ,,	ins.		$2\frac{3}{4}$	$3\frac{1}{8}$	$3\frac{1}{8}$	$3\frac{1}{2}$	$3\frac{1}{2}$	$3\frac{11}{16}$	$4\frac{1}{8}$	$4\frac{5}{16}$	$8\frac{1}{2}$
Diameter ,, belt-pulley	,,		$7\frac{7}{8}$	$9\frac{13}{16}$	$9\frac{13}{16}$	$11\frac{13}{16}$	$13\frac{3}{4}$	$17\frac{11}{16}$	$19\frac{11}{16}$	$23\frac{5}{8}$	$27\frac{9}{16}$
Rim ,, ,,	,,		$5\frac{1}{2}$	$6\frac{1}{4}$	$7\frac{1}{16}$	$7\frac{7}{8}$	$8\frac{5}{8}$	11	$12\frac{9}{16}$	$13\frac{3}{4}$	$15\frac{3}{4}$
Price for second flywheel for electric lighting	£ *s.*		3 10	4 0	4 10	5 0	5 10	6 15	8 5	9 10	11 10
Net weight of standard engine	cwts. qrs.		7 3	9 3	11 3	15 3	18 3	22 2	27 2	29 2	43 1
Gross ,, ,,	,,		10 3	12 3	15 3	19 3	22 2	28 2	34 2	36 2	51 1
Price of ordinary packing	£ *s.*		1 0	1 2	1 4	1 14	2 0	2 5	2 10	2 18	3 10
Price of hand starting-device	,,		2 5	2 10	2 15	3 0	3 5	3 10	3 15	4 0	4 5

Digitized by Google

Stationary Liquid-fuel Engine, using Alcohol, Benzol, "Ergin," Petrol, and Paraffin, built by the Maschinenbau-Aktiengesellschaft, formerly Ph. Swiderski, Leipzig-Plagwitz.

This vertical slow-speed engine, of 1 to 15 h.-p., is illustrated in figs. 112 to 114.

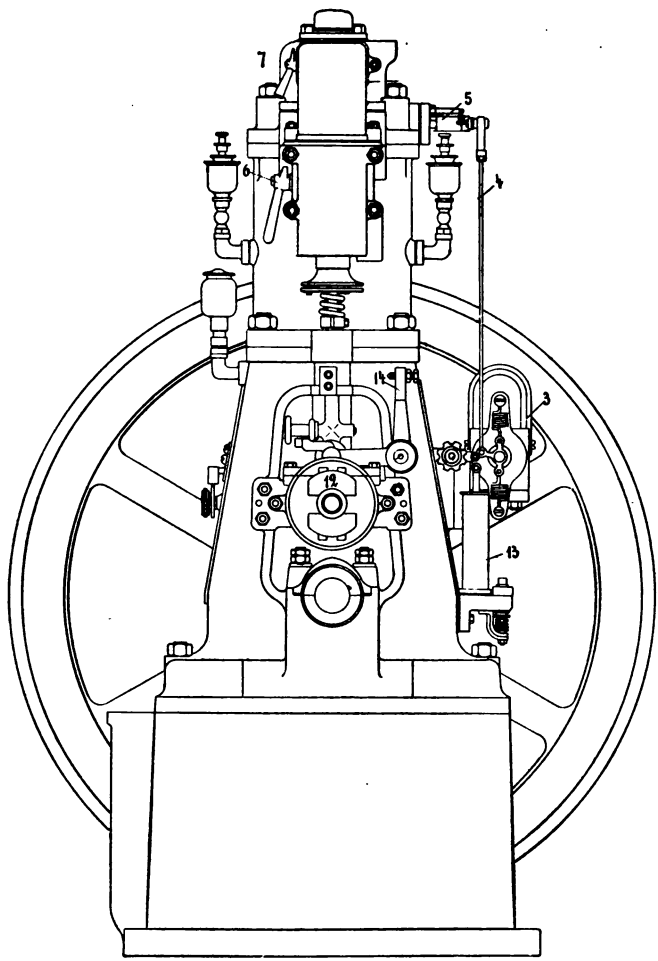

FIG. 112.

Digitized by Google

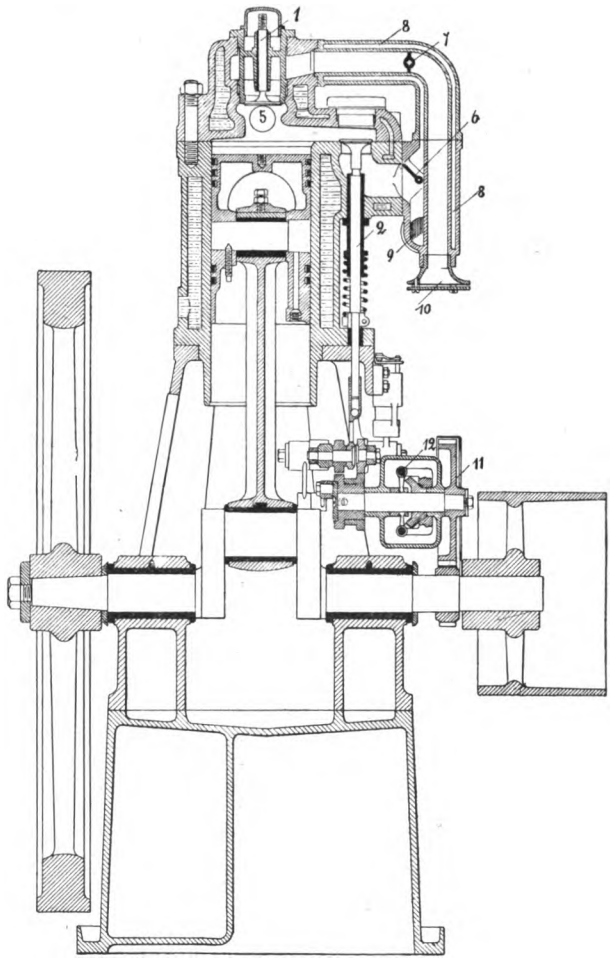

FIG. 113.

FIGS. 112 and 113.

1, Inlet valve; 2, Exhaust valve; 3, Magneto; 4, Rod working ignition; 5, Ignition mounting; 6, Regulating valve for controlling the heating of the vaporising chamber; 7, Air-regulation valve; 8, Hot jacket; 9, Exhaust connections; 10, Air inlet; 11, Lay-shaft; 12, Governor; 13, Air pump for fuel tank; 14, Fuel-pump lever.

Digitized by Google

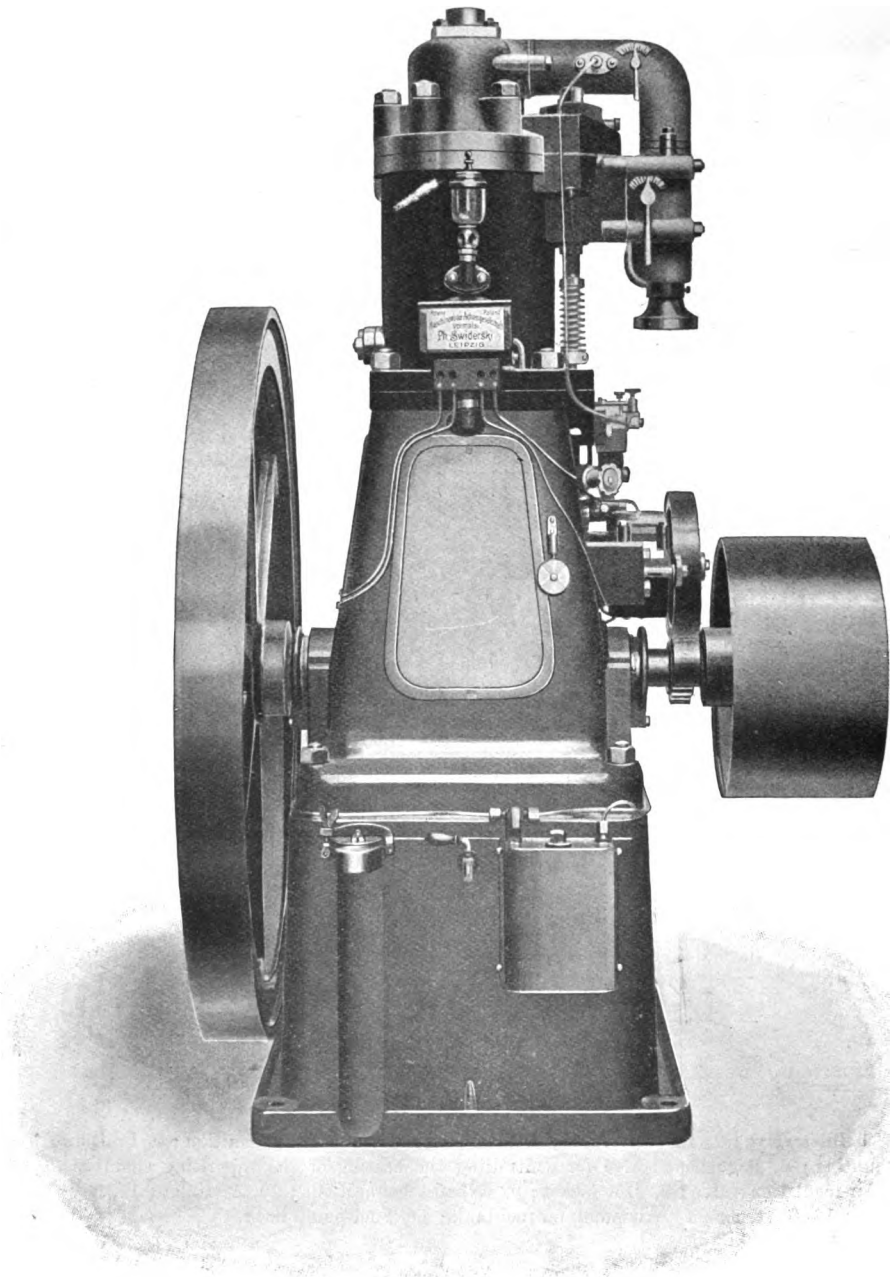

FIG. 114.—Swiderski liquid-fuel engine.

Digitized by Google

Stationary Liquid-fuel Engine, using Petrol and Benzol, built by the Motorenfabrik "Oberursel" A.-G., Oberursel, near Frankfort-Main.

This vertical slow-speed engine is illustrated in figs. 115 to 118.

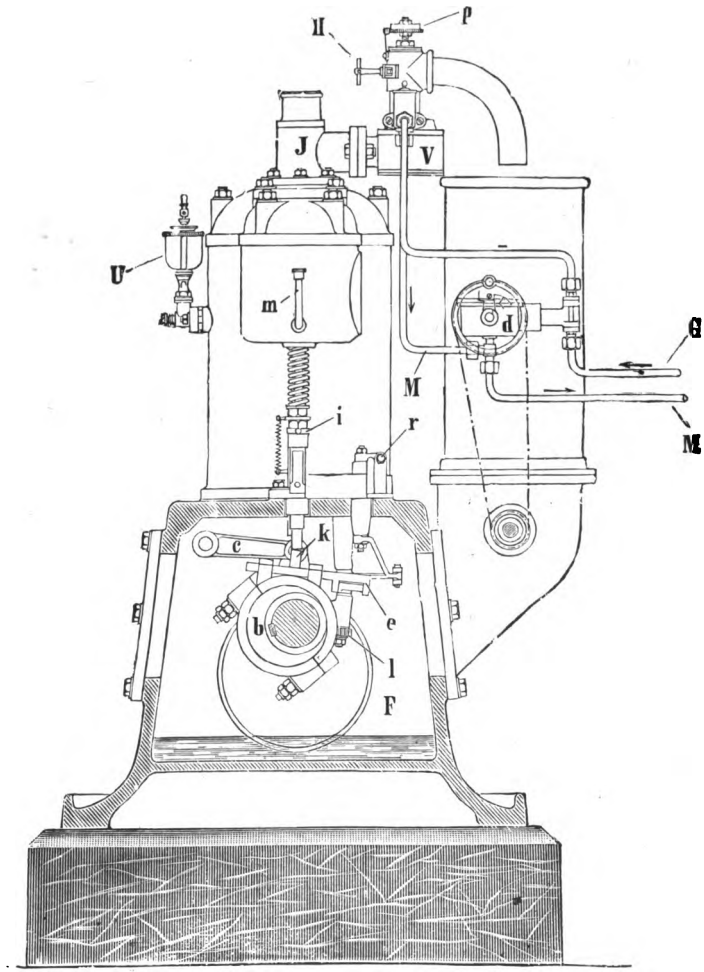

FIG. 115.—Oberursel engine (section through base-plate).

Digitized by Google

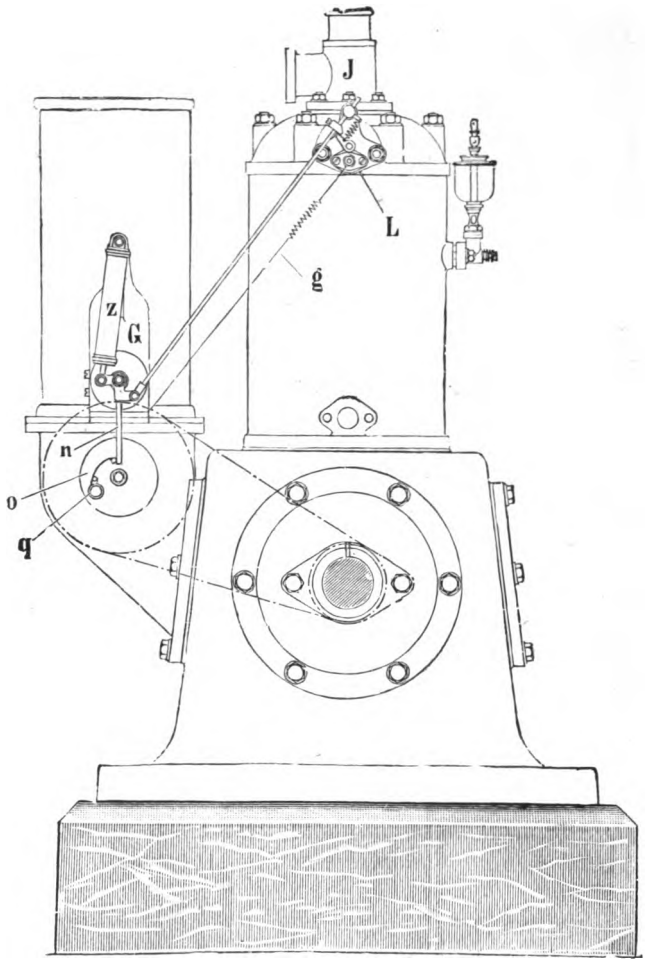

FIG. 116.—Oberursel engine (side elevation).

FIGS. 115 and 116.

F, Base plate; G (fig. 115), Fuel supply; H, Air valve; J, Inlet valve chest; L, Ignition mounting; M, Fuel return pipe; *p*, Fuel regulating screw; V, Mixture chamber; *i*, Compression release gear; *k*, Striker for operating the exhaust valve; *c*, Cam lever; *e*, Governing gear; *r*, Lever for governor gear; *g*, Electric current conductor; *z*, Spring casing; *n*, Arm on the armature spindle; *o*, Cam spring operating the armature arm; *q*, Movable pin for early or late ignition.

Digitized by Google

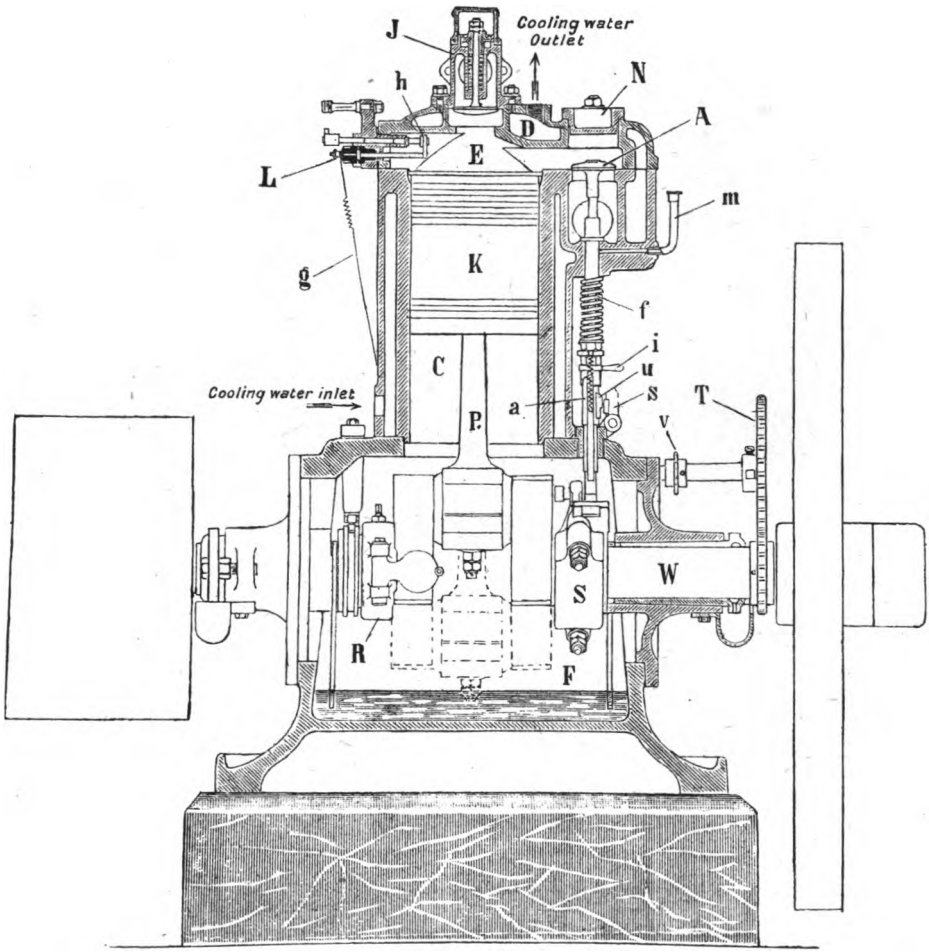

FIG. 117.—Oberursel liquid-fuel engine.

A, exhaust valve; N, Cover of exhaust valve chamber; D, Cooling jacket; *h*, Interrupter arm; E, Combustion chamber; *u*, *s*, Pawls by which the exhaust valve is held up in governing; *v*, Chain sprocket for driving the fuel pump; T, Chain sprocket for working the magneto; R, Governor; S, Eccentric operating the exhaust valve.

Digitized by Google

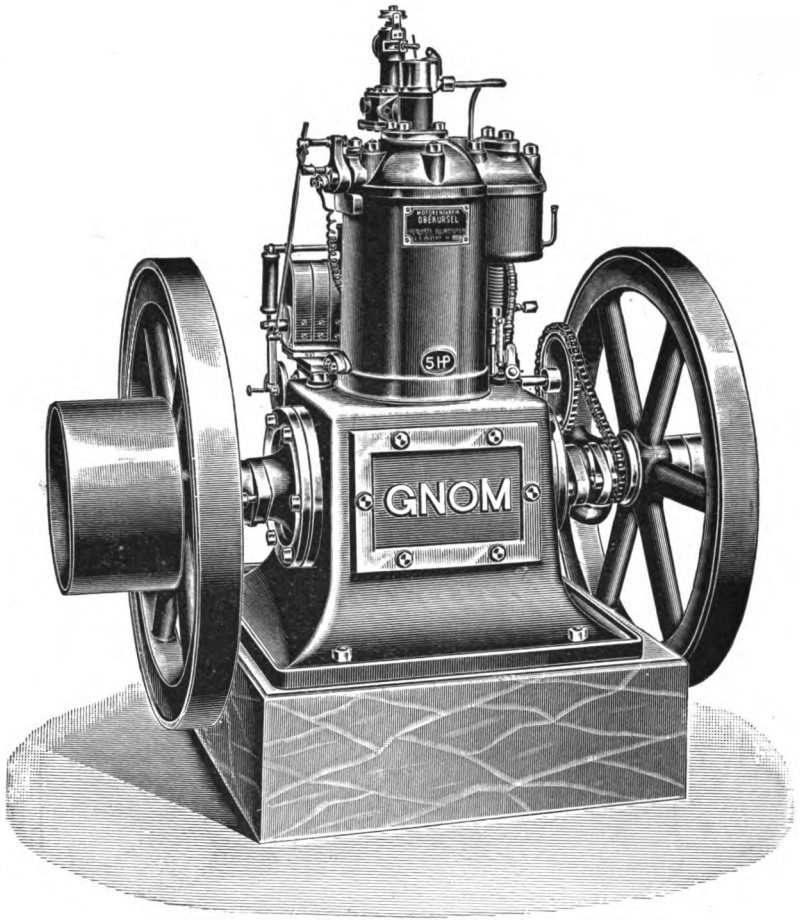

FIG. 118.—Oberursel liquid-fuel engine.

DETAILS OF OBERURSEL HORIZONTAL ENGINE,

using petrol, alcohol, paraffin, illustrated in fig. 119.

Size of engine in effective h.-p.	6	8	10	12	15	18	22	30
	£ s.	£ s.	£ s.	£ s.	£ s.	£ s.	£ s.	£ s.
Price of engine for ordinary purposes, including accessories and spare parts .	130 0	140 0	165 0	192 10	240 0	290 0	340 0	390 0
Extra, when outside bearing, longer shaft, and flywheel are required . . .	5 0	5 0	6 5	6 5	7 10	7 10	10 0	10 0
Extra, when for electric lighting a flywheel governor is supplied, increasing uniform running to about 1 in 70 . . .	7 0	9 0	10 0	11 0	12 0	13 10	15 0	20 0
Foundation bolts and plates for brick foundations .	1 10	1 10	2 0	2 0	2 10	2 10	3 0	4 0

Digitized by Google

Details of Oberursel Vertical Engine "Gnom,"

using petrol and benzol, illustrated in figs. 115 *to* 118.

Size according to h.-p.	1	2	3	4	5	6	8	10	12	15	20	25
H.-p. up to approximately	1½	3	4	5	6¼	7½	10	12	15	18	24	28
Price, including petrol apparatus with magneto ignition . . . . . £ s.	62 10	75 0	92 10	107 10	118 15	133 15	165 0	187 10	215 0	242 10	307 10	367 10
Height of engine . . . . . ft. ins.	3 1	3 3	3 5	3 7	3 11	4 3	4 5	5 1	5 7	6 1	6 1	7 3
Width of engine, parallel to crank shaft . . . . . ,, ,,	3 5	3 8	3 8	4 3	4 7	4 11	5 3	5 11	6 5	6 11	7 3	7 4
Length (depth) of engine . . . ,, ,,	2 4	2 7	2 9	2 11	3 3	3 3	3 7	3 11	4 3	4 7	4 11	5 3
Diameter of flywheel . . . . ,, ,,	2 4½	2 7½	2 9½	2 11½	3 3⅝	two 3 3⅝	two 3 7	two 3 11	two 4 3	two 4 7	two 4 11	two 5 3
Rim ,, ,, ... ins.	2 1/16	2¾	2¾	2⅞	3¼	3⅜	3½	3⅛	3½	3⅞	3⅞	4⅜
Diameter of belt pulley . . . ,,	7⅞	11¾	11¾	15¾	15¾	19⅝	23⅝	25½	27½	27½	29½	31½
Rim ,, ,, ... ,,	5⅛	7	7⅛	7⅛	8⅛	11¾	11¾	13¾	13¾	13¾	17¾	19⅝
Speed ,, ,, in revs. per min. .	400	360	360	350	300	300	290	280	270	260	250	250
Gross weight . . approximate cwts. qrs	11 3	17 1	18 0	19 1	24 1	32 0	36 1	44 1	52 1	67 1	74 3	86 2
Nett . . . ,, ,, ,,	9 3	14 2	15 1	16 2	21 1	28 2	32 4	40 2	48 1	63 0	68 4	78 3

Digitized by Google

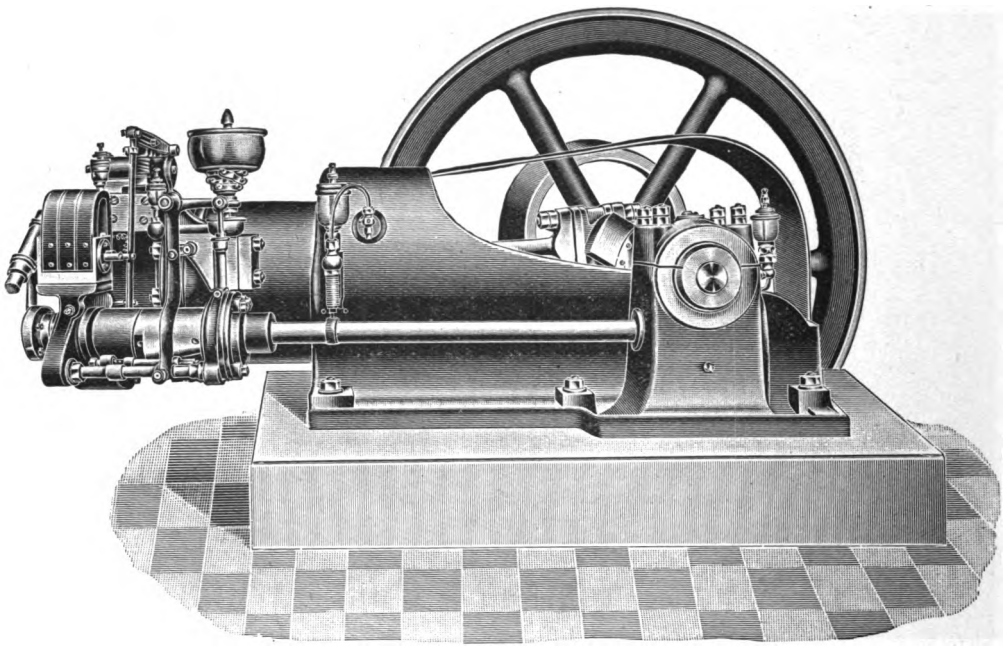

FIG. 119.—Stationary engine working with petrol, alcohol, and paraffin, built by the Motorenfabrik Oberursel A.-G., Oberursel, Frankfort-Main.

Horizontal slow-speed type. Charge supply by pump and atomiser.

Digitized by Google

Gardner Stationary Liquid-fuel Engines, built by Bieberstein & Goedicke, Hamburg.

Figs. 120 and 121 illustrate the horizontal slow-speed type, built in sizes of from $\frac{3}{4}$ to 55 h.-p.

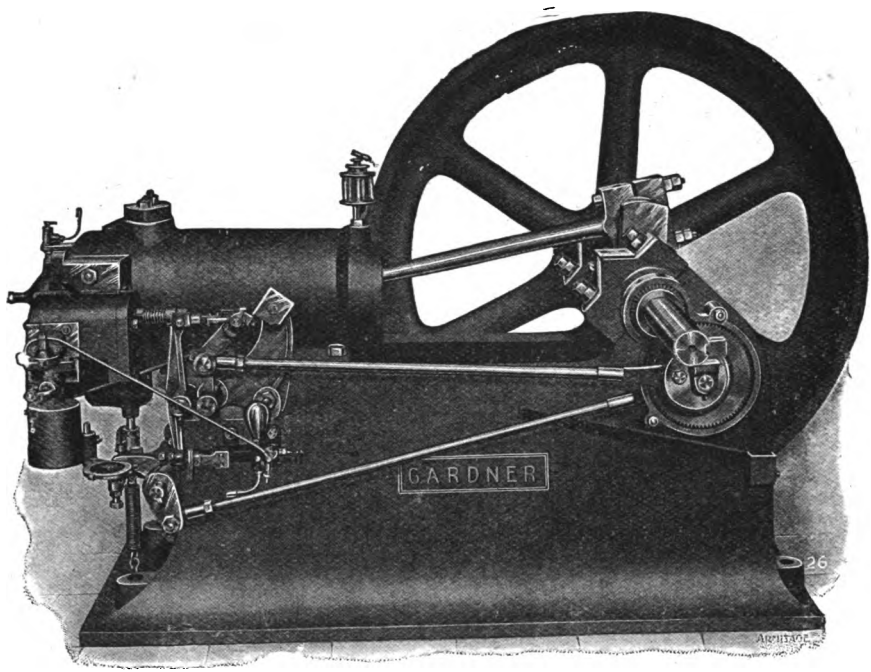

FIG. 120.—Gardner liquid-fuel engine, type 3 to 5.

Digitized by Google

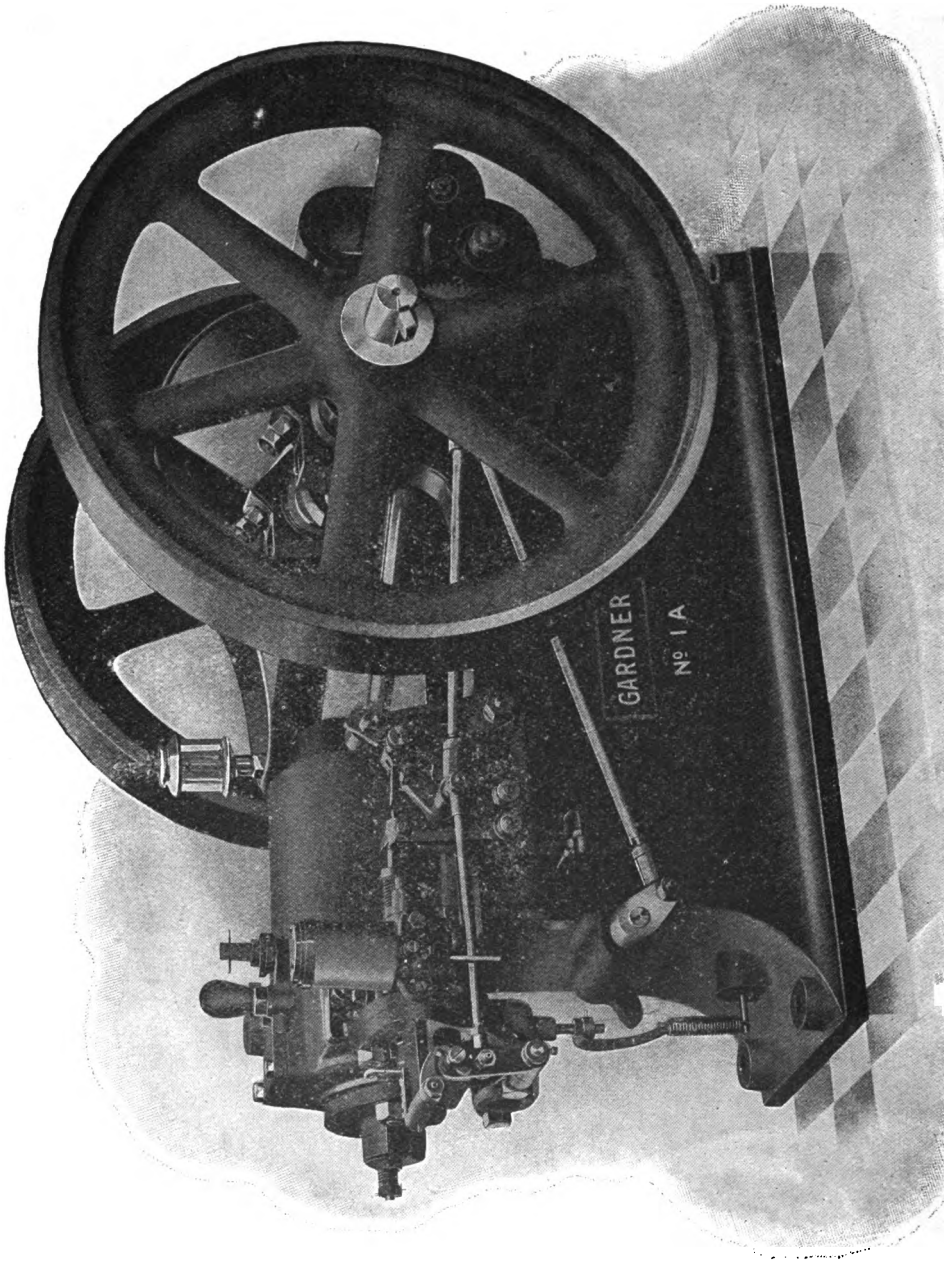

FIG. 121.—Gardner liquid-fuel engine, type 1 to 2A.

Digitized by Google

Details of Gardner Liquid-Fuel Engines,

illustrated in figs. 120 *and* 121.

Type No.	Speed in revs. per minute.	Brake h.-p. using: Petrol.	Brake h.-p. using: Paraffin.	Approximate weight of engine complete: Gross.	Approximate weight of engine complete: Net.	Standard belt-pulley: Dia.	Standard belt-pulley: Rim.	Flywheel: Dia.	Flywheel: Rim.	Price of engine complete, using: Petrol and alcohol with magneto ignition.	Price of engine complete, using: Paraffin with tube ignition.	Extra price: for two flywheels.	Extra price: for lighting type.
		h.-p.	h.-p.	cwt. qr.	cwt. qr.	ft. ins.	ft. ins.	ft. ins.	ft. ins.	£ s.	£ s.	£ s.	£ s.
0	450	·75	·75	2 4	2 2	0 5⅞	0 5⅛	1 6	0 3		38 0	1 10	
1	350 400	1·3 1·5	1·3 1·5	4 4	3 3	0 5⅞	0 5⅛	2 0	0 3	49 5	45 0	2 5	
1 A	320 350	1·8 2·	1·8 2·	7 0	6 0	0 7⅛	0 5⅛	2 6	0 4	65 0	61 10	3 0	
2	300 340	2·5 3·	2·5 3·	11 2	9 3	0 7⅛	0 5⅞	3 0	0 4	79 0	78 0	5 0	
2 A	300 340	3·5 4·	3·25 3·5	11 3	10 0	0 7⅛	0 5⅞	3 0	0 4	87 10	85 0	5 0	
3	260 280 300	5· 5·4 5·8	4·5 4·8 5·	17 4	14 0	1 1¾	0 9¾	3 3	0 5	107 10	107 10	6 10	11 15
4	250 270 280	6· 6·5 6·7	5·3 5·7 5·9	20 1	15 4	1 3¾	0 9¾	3 6	0 5	120 0	120 0	7 10	12 10
4 A	240 260 270	8·5 9·3 9·6	7· 7·7 8·	25 3	22 0	1 7⅝	0 11⅜	3 9	0 5	140 0	140 0	9 10	15 0
5	230 250 260	10·4 11·3 11·8	8· 8·5 9·	32 2	27 2	1 11⅝	1 0⅛	4 0	0 6	165 0	165 0	11 0	17 10
6	220 240 250	12· 13· 13·6	10·3 11·2 11·7	40 1	35 2	2 3½	1 1¾	4 6	0 7	190 0	190 0	13 15	22 10
7	210 220 240	17· 20· 21·	16· 18· 19·5	64 0	55 2	2 9⅜	1 1¾	5 0	0 7	230 0	237 10	17 10	28 15
8	200 220 230	22· 24· 25·5	19·5 21· 22·5	66 0	58 3	3 3⅛	1 2½	5 2 Two flywheels	0 7	250 0	270 0	18 15	31 5
9	190 200 220	26· 27·5 28·	24· 25·5 28·	106 0	92 1			5 4	0 7	320 0	350 0		35 0
10	190 200 220	32· 33·5 37·	30· 31·5 34·5	111 1	99 2			5 5	0 8	380 0	420 0		37 10
11	180 190 200	39·5 41·5 44·	35· 37· 39·	137 3	123 2			5 6	0 9	440 0	480 0		40 0
12	180 190 200	49· 52· 55·	44· 46·5 49·	151 2	133 3			5 8	0 9	535 0	560 0		43 15
12 A	180 190 200		47· 50· 54·	157 2	137 3			5 8	0 9	575 0	600 0		43 15

Digitized by Google

Liquid-fuel Stationary Engines, built by Tangyes Ltd., Cornwall Works, Birmingham.

Horizontal slow-speed engines, in sizes of from 2 to 40 h.-p., are illustrated in figs. 122 to 129.

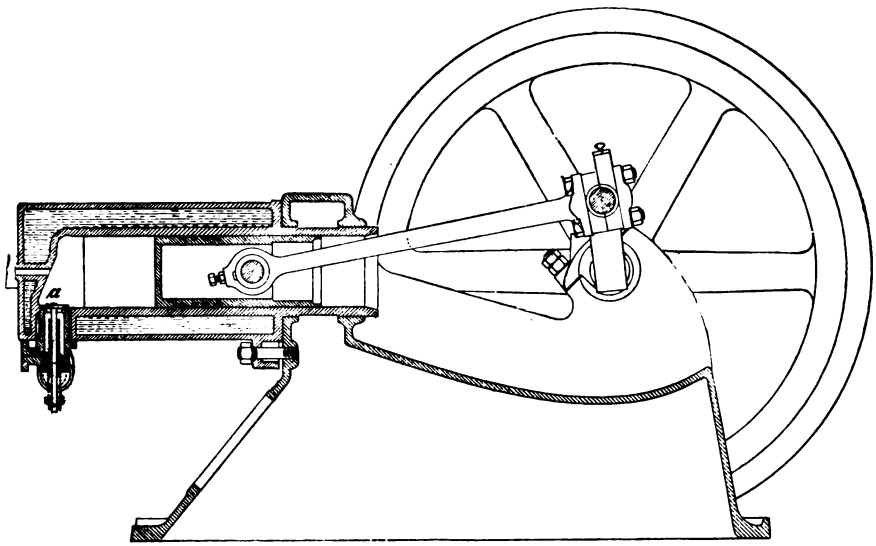

FIG. 122.—Vertical section of Tangye engine.

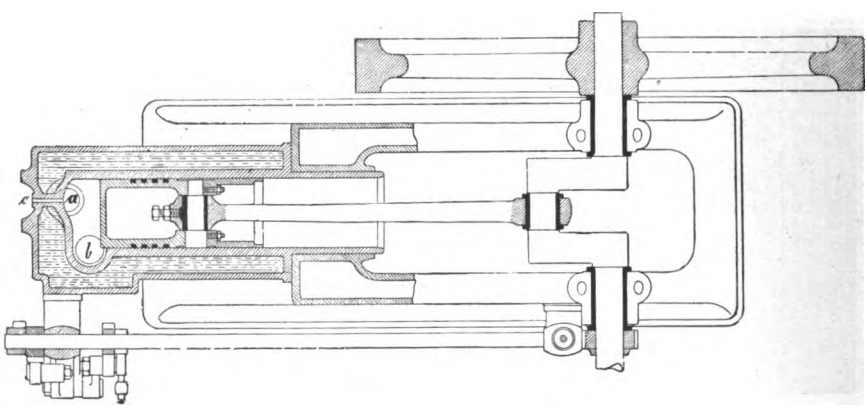

FIG. 123.—Horizontal section of Tangye engine.

Digitized by Google

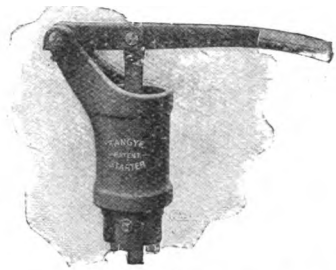

FIG. 125.—Feed pump for starting with petrol.

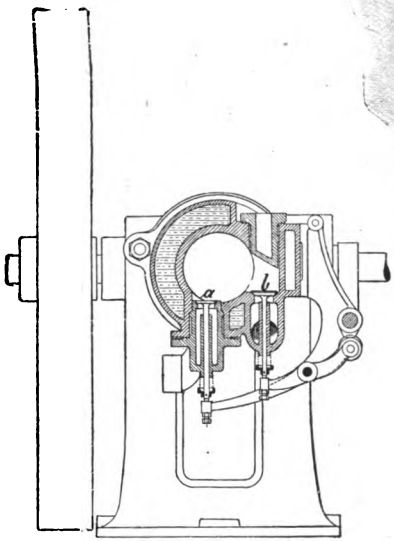

FIG. 124.—Cross-section of Tangye engine.

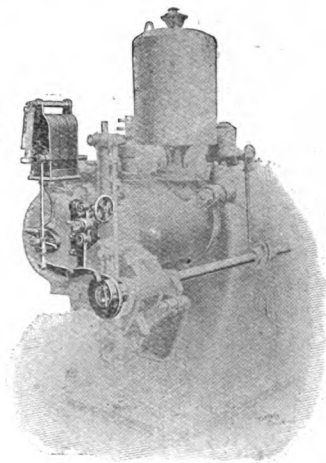

FIG. 126.—Electric ignition.

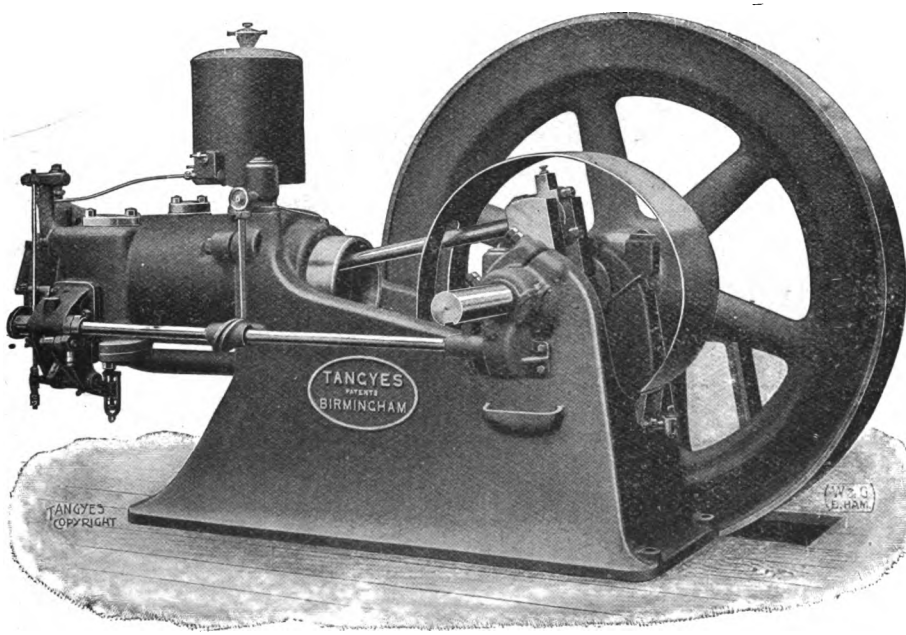

FIG. 127.—Tangye liquid-fuel engine, using petrol, benzol, and paraffin, for small powers.

Digitized by Google

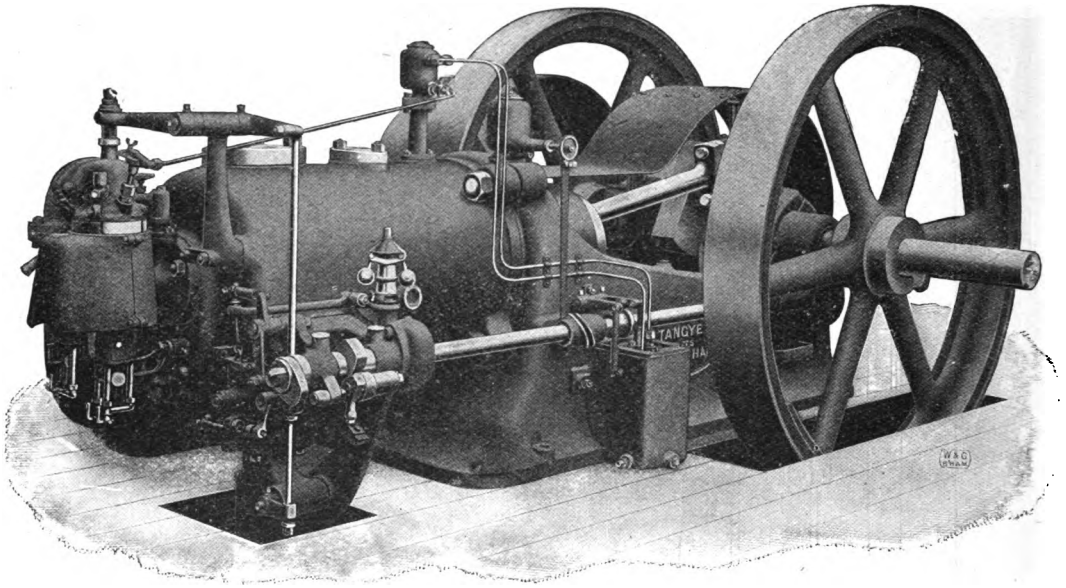

FIG. 128.—Tangye liquid-fuel engine, using petrol, benzol, and paraffin, for large powers.

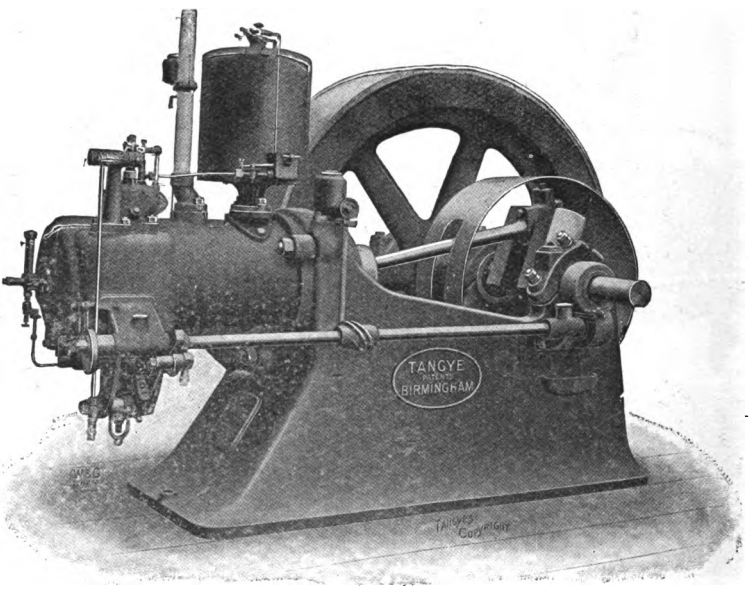

FIG. 129.—Tangye alcohol engine.

Digitized by Google

Liquid-fuel Stationary Engines, using Petrol, Benzol, "Ergin," and Alcohol, Söhnlein System, built by the "Solos" Motorengesellschaft, Wiesbaden.

The two-stroke-cycle slow-speed engine is illustrated in figs. 130 and 131.

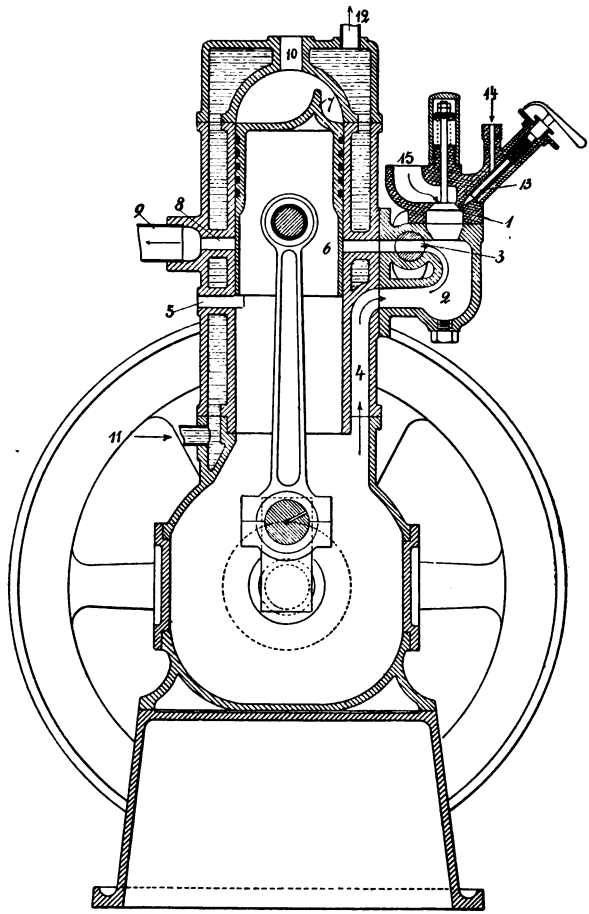

FIG. 130.—Söhnlein two-stroke-cycle, valveless engine.

1, Fuel inlet port; 2, Mixture chamber; 3, Cock for speed governing; 4, Air passage from crank chamber; 5, Air inlet; 6, Air passage to working cylinder; 7, Deflector on the piston to guide the new charge into the combustion chamber; 8, Exhaust port; 9, Exhaust pipe; 10, Opening for ignition device; 11, Jacket water inlet; 12, Jacket water outlet; 13, Feed needle valve; 14, Fuel inlet; 15, Air inlet.

Digitized by Google

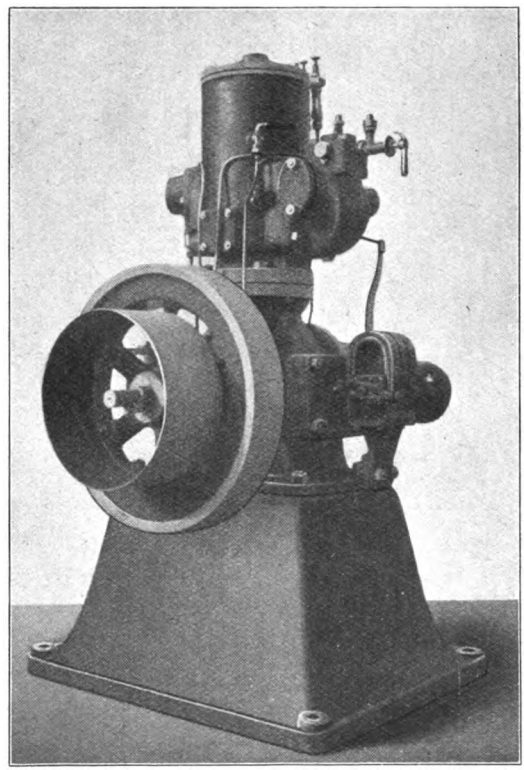

FIG. 131.—Söhnlein two-stroke-cycle valveless engine.

Digitized by Google

Details of Söhnlein Engines,

illustrated in figs. 130 *and* 131.

Piston speed 98·43 ins. per second.

Type.	Cylinder.			H.-P.	Revolutions per minute.	Price of engine with battery ignition.	Extra for magneto ignition.
	No.	Bore.	Stroke.				
		ins.	ins.			£ s.	£ s.
I 1	1	3⅛	3 15/16	1·5	750	40 0	8 15
II 1	1	3 15/16	4 11/16	3	600	47 10	8 15
III 1	1	4 11/16	5⅞	4	500	60 0	8 15
VI 1	1	5⅞	8 3/16	6·5	330	80 0	10 0
IV 2	2	5⅞	8 3/16	13	330	160 0	11 5
III 3	3	4 11/16	5⅞	11	500	170 10	11 5
IV 3	3	5⅞	8 3/16	19	330	230 0	12 10
IV 4	4	5⅞	8 3/16	26	330	310 0	14 0

Piston speed 157·48 ins. per second.

Type.	Cylinder.			H.-P.	Revolutions per minute.	Price of engine with battery ignition.	Extra for magneto ignition.
	No.	Bore.	Stroke.				
		ins.	ins.			£ s.	£ s.
I 1	1	3⅛	3 15/16	3	1200	40 0	8 15
II 1	1	3 15/16	4 11/16	4·5	1000	47 10	8 15
III 1	1	4 11/16	5⅞	6·5	800	60 0	8 15
IV 1	1	5⅞	8 3/16	10·5	530	80 0	10 0
I 2	2	3⅛	3 15/16	6	1200	80 0	10 0
II 2	2	3 15/16	4 11/16	9	1000	95 0	10 0
III 2	2	4 11/16	5⅞	13	800	120 0	10 0
IV 2	2	5⅞	8 3/16	21	530	160 0	11 5
I 3	3	3⅛	3 15/16	9	1200	120 0	11 5
II 3	3	3 15/16	4 11/16	13	1000	140 0	11 5
III 3	3	4 11/16	5⅞	19	800	175 0	11 5
IV 3	3	5⅞	8 3/16	31	530	230 0	12 10
I 4	4	3⅛	3 15/16	12	1200	150 0	12 10
II 4	4	3 15/16	4 11/16	18	1000	180 0	12 10
III 4	4	4 11/16	5⅞	26	800	225 0	12 10
IV 4	4	5⅞	8 3/16	42	530	310 0	14 0

Digitized by Google

Liquid-fuel Stationary Engines, using Petrol, Benzol, "Ergin," and Alcohol, constructed on the Banki System, by Ganz & Co., Budapest, Ratisbon and Loebersdorf.

These are illustrated in figs. 132 and 133. When petrol is used, the engine works with a water spray.

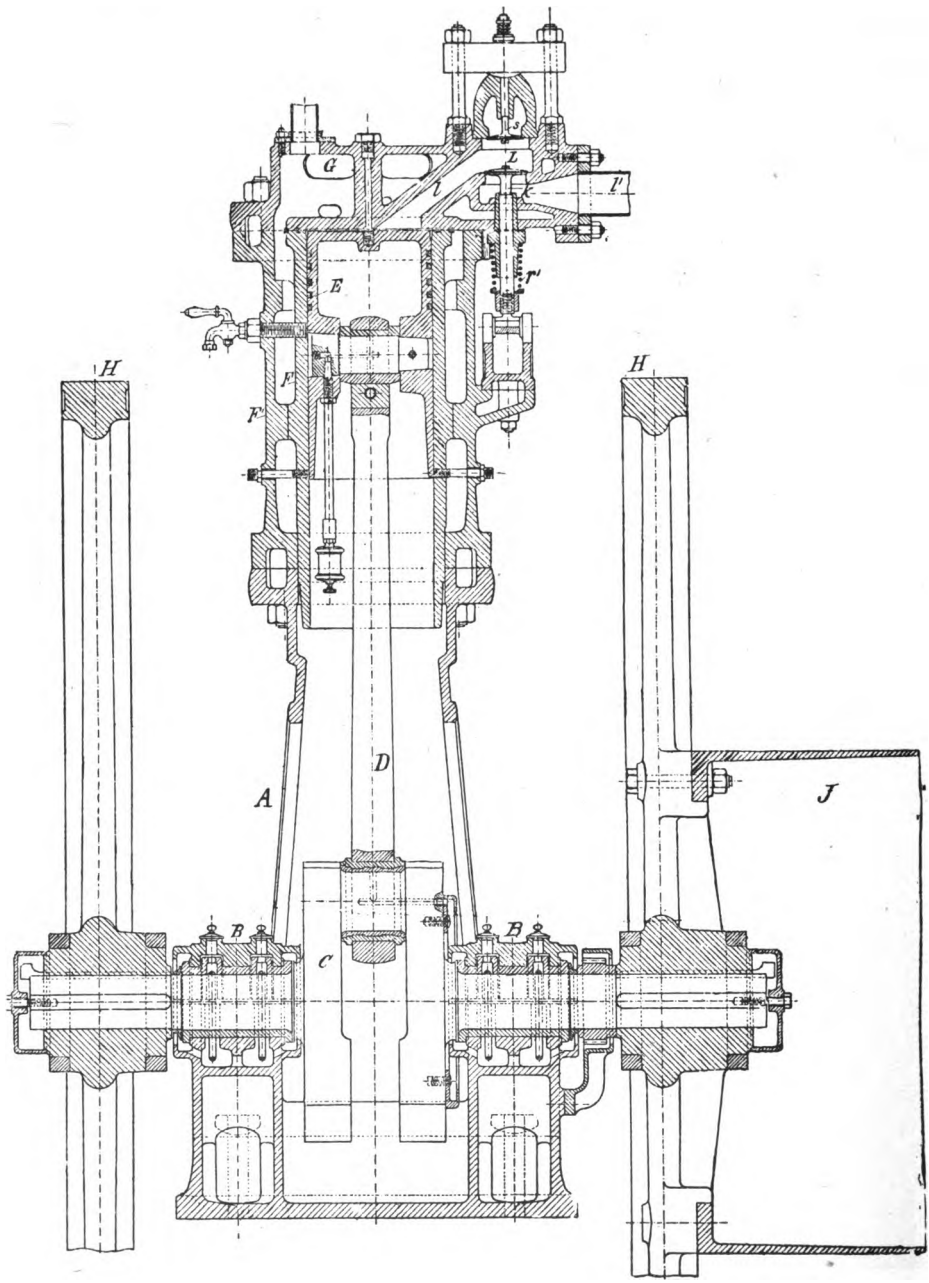

FIG. 132.—Banki engine (vertical section).

Digitized by Google

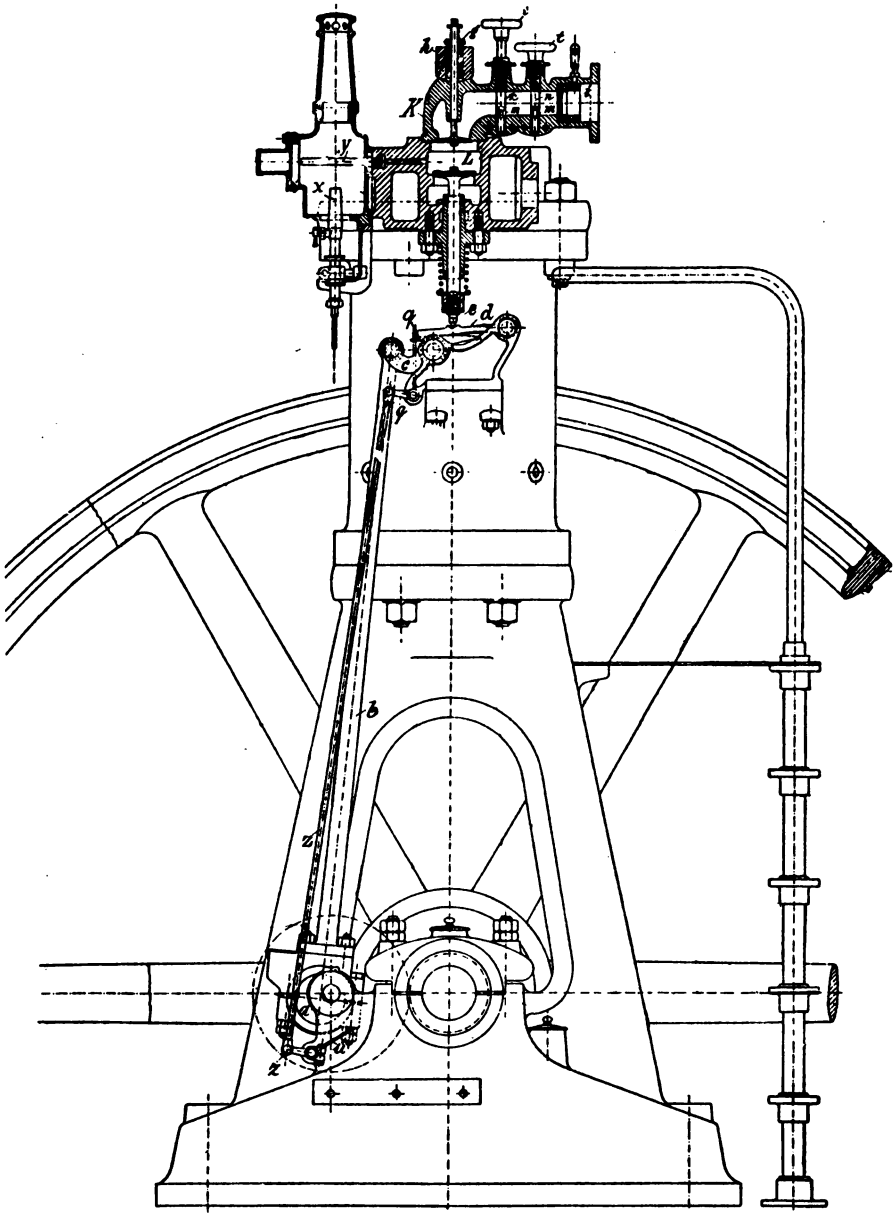

FIG. 133.—Banki engine (side elevation).

L *l*, Combustion chamber ; *n*, *m*, Petrol spray and water spray ; *t*, Regulating nozzle for petrol and water ; *k*, Exhaust valve ; *s*, Inlet valve ; *l'*, Exhaust pipe ; G, Strengthening ribs in cover cooling jacket.

Digitized by Google

CHAPTER VII.

RECENT STATIONARY ENGINES WORKING WITH PARAFFIN AND CRUDE OIL.

As already mentioned, there have been recently no striking improvements in the construction of engines using paraffin and crude oil, in which the mixture formation takes place during the suction-stroke. The Capitaine engine and the Oberursel engine "Gnom" referred to above, are the only ones of this kind which have hitherto stood their ground in Germany without modification of design. To these may be added, as regards Austria, the Banki engine shown in figs. 134 and 135.

Similar remarks apply to the class of engines in which the mixture is formed during the compression stroke. In these, the old form of combustion, introduced by Akroyd and described in the third chapter, is still to the fore. Neither do the newer two-stroke-cycle engines working on this principle, and in which a water spray is added to the paraffin spray, present any really novel feature; they form a kind of combination of the Söhnlein valveless two-cycle engine, with the Akroyd engine, in which the Banki water spray is utilised.

In contradistinction to the small progress made with engines working on the mixture-forming principle, the construction of those working without carburation has been pushed to a high state of development. This system is represented by the well-known Diesel engine; this engine ranks among the prime movers, and for cheapness and reliableness, both in medium size and large types, it far exceeds all other internal combustion engines.

The fuel consumption for a 200 horse-power Diesel engine, supplied with paraffin of 9789 calories (17620 B.Th.U.) is from about 179 and 183 grammes (·39 and ·40 lb.) per horse-power hour.

An engine very similar to the Diesel motor, is built by the Gebr. Körting Company, Hanover. In this engine the air alone is highly compressed, and the fuel is driven in at the commencement of the working-stroke by specially high compressed air. In contrast, however, to what takes place in the Diesel engine, the air used for forcing in the charge is not supplied by a separate pump drawing direct from the atmosphere, but, towards the end of the compression stroke, a certain amount of the cylinder air at this stage already highly compressed, is drawn off and further compressed. This is

Digitized by Google

used to spray in the fuel deposited in the spraying nozzle, and ignition then takes place automatically, as in the case of the Diesel engine.

Stationary Paraffin Engine, Banki System, built by Ganz & Co., Budapest.

(Figs. 134 and 135.)

This engine works with a vaporiser, which has been described in Chapter IV. The ignition tube is heated only when starting up.

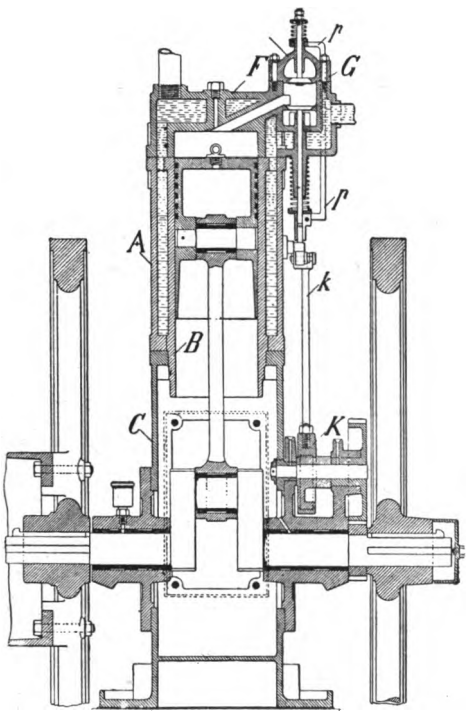

FIG. 134.

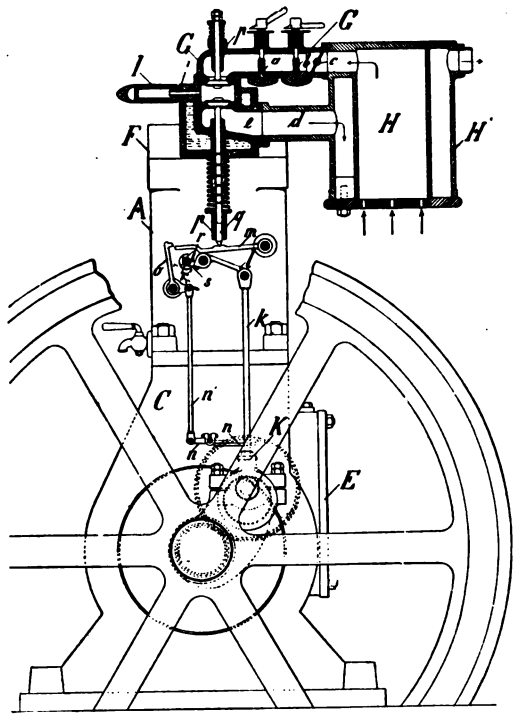

FIG. 135.

A, water jacket; B, Cylinder liner; C, Crank chamber and engine base; E, Cover of crank chamber; F, Cylinder top cover; G, Vaporiser; H H', Exhaust jacketed air heater; *a*, Petrol feed sprayer; *b*, Water sprayer; *c*, Air regulating device; *p*, Catch for holding up the inlet valve when regulating by cutting out explosions; *m*, Lifting lever; *q*, Spindle lifting the exhaust valve; K, Eccentric; *k*, Eccentric rod; *n*, Governor rod; *o r s*, Trip mechanism for keeping the exhaust valve open to regulate the speed of the engine.

Digitized by Google

Stationary Diesel Engine, working with Paraffin and Crude Oil, built by the Vereinigte Maschinenfabrik, Augsburg and Maschinenbau-gesellschaft, Nuremberg, Augsburg.

(Figs. 136 to 143.)

The method of working of this engine has been explained in Chapter III. The cost of fuel, including cost of transport by rail of the crude oil, may be reckoned at $\frac{1}{4}$ to 2 pf. (0·03d. to 0·24d.) per horse-power hour, according to the size of the engine and the locality.

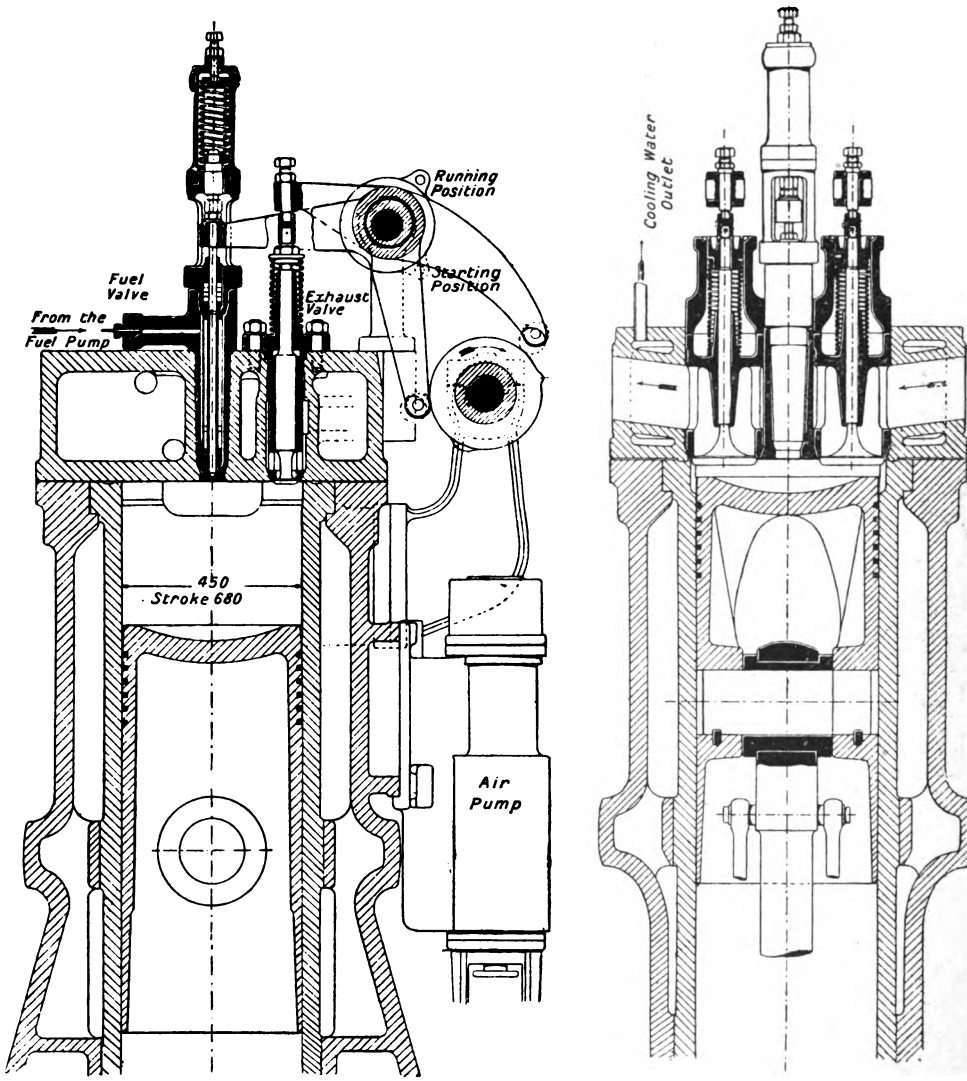

FIGS. 136 and 137.

Digitized by Google

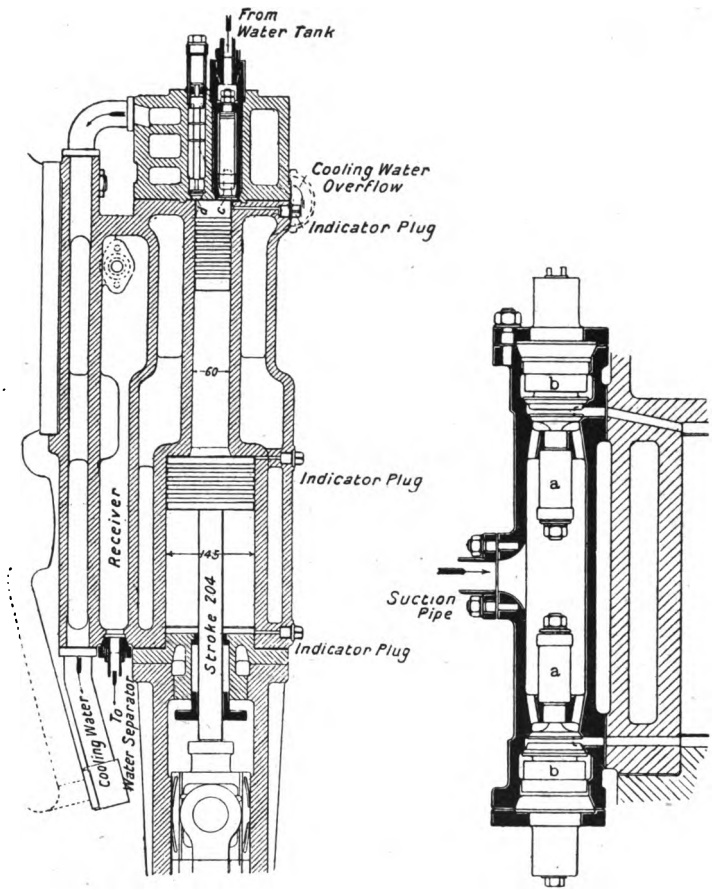

FIGS. 138 and 139.—Diesel engine pump, for second stage of air compression, for supplying the air for spraying the fuel.

a and *b*, Suction and pressure valves of the first stage.

Digitized by Google

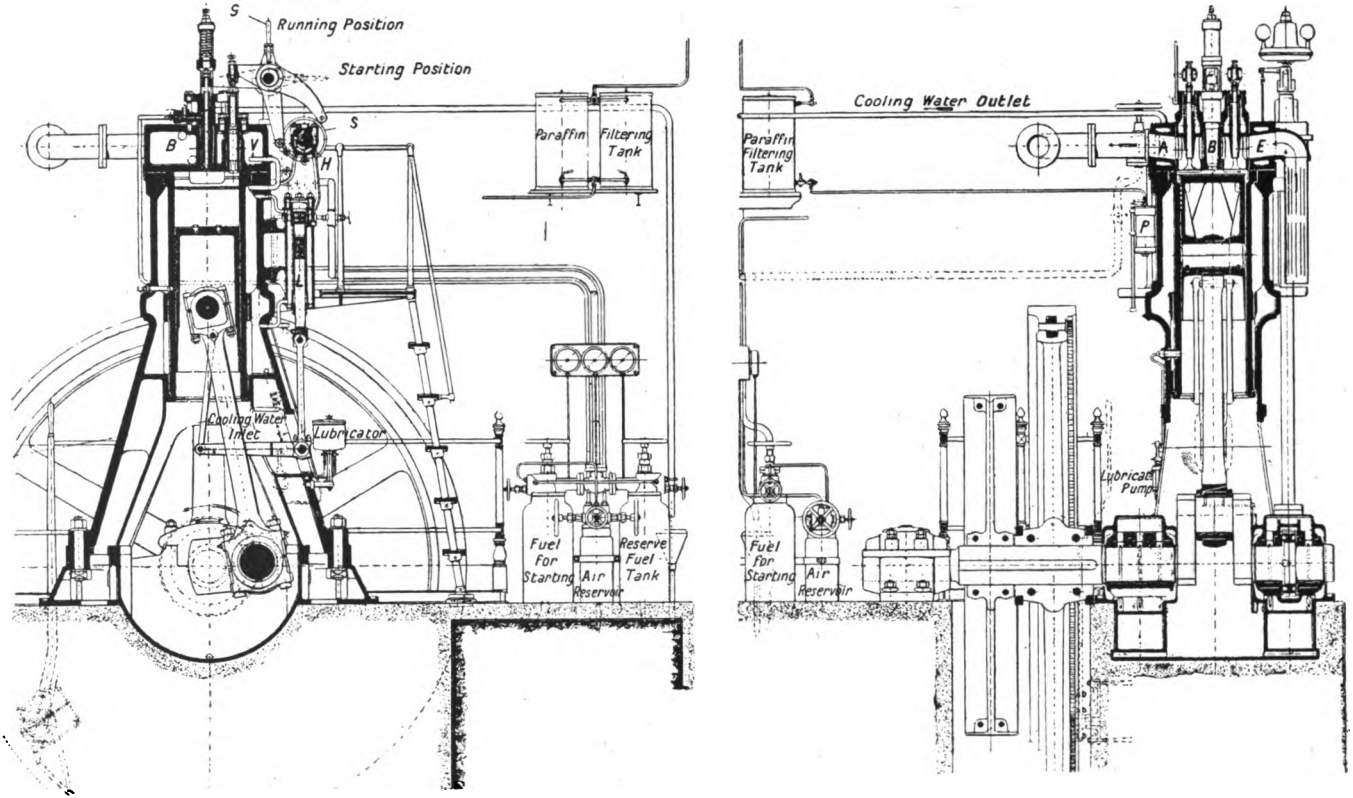

FIGS. 140 and 141.—Details of a Diesel engine.

A, Exhaust valve ; B, Fuel inlet valve ; E, Inlet valve for air supply ; V, Compressed air valve for starting the engine ; S, Cams for working the valves ; H, Lay shaft ; P, Fuel pump (described in Chapter IV.) ; G, Hand lever of starting gear ; L, Air pump which supplies air for spraying the fuel, shown on a larger scale in figs. 138 and 139.

Digitized by Google

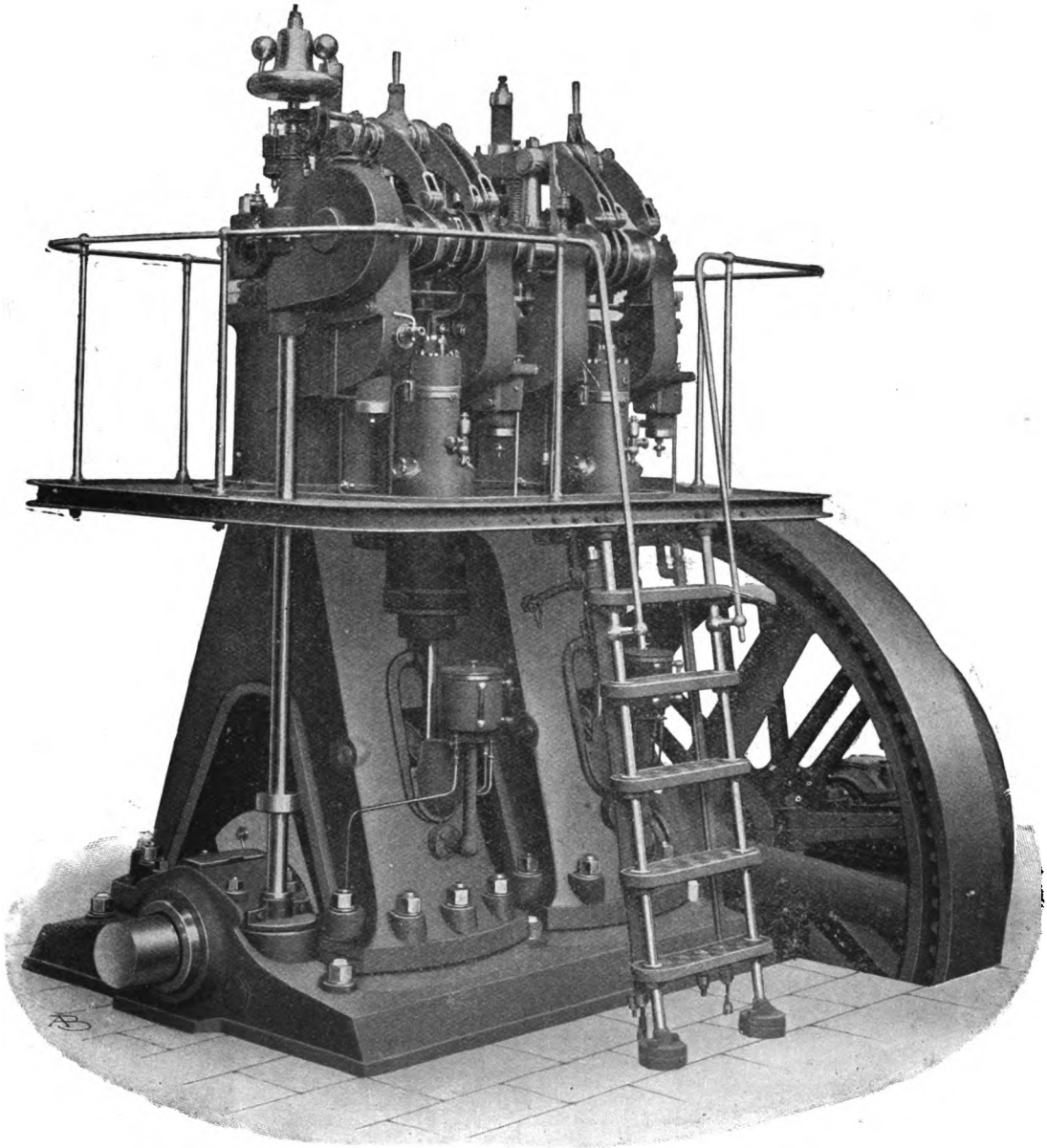

FIG. 142.—120 h.-p. Diesel engine, built by the Maschinenfabrik Augsburg (front view).

Digitized by Google

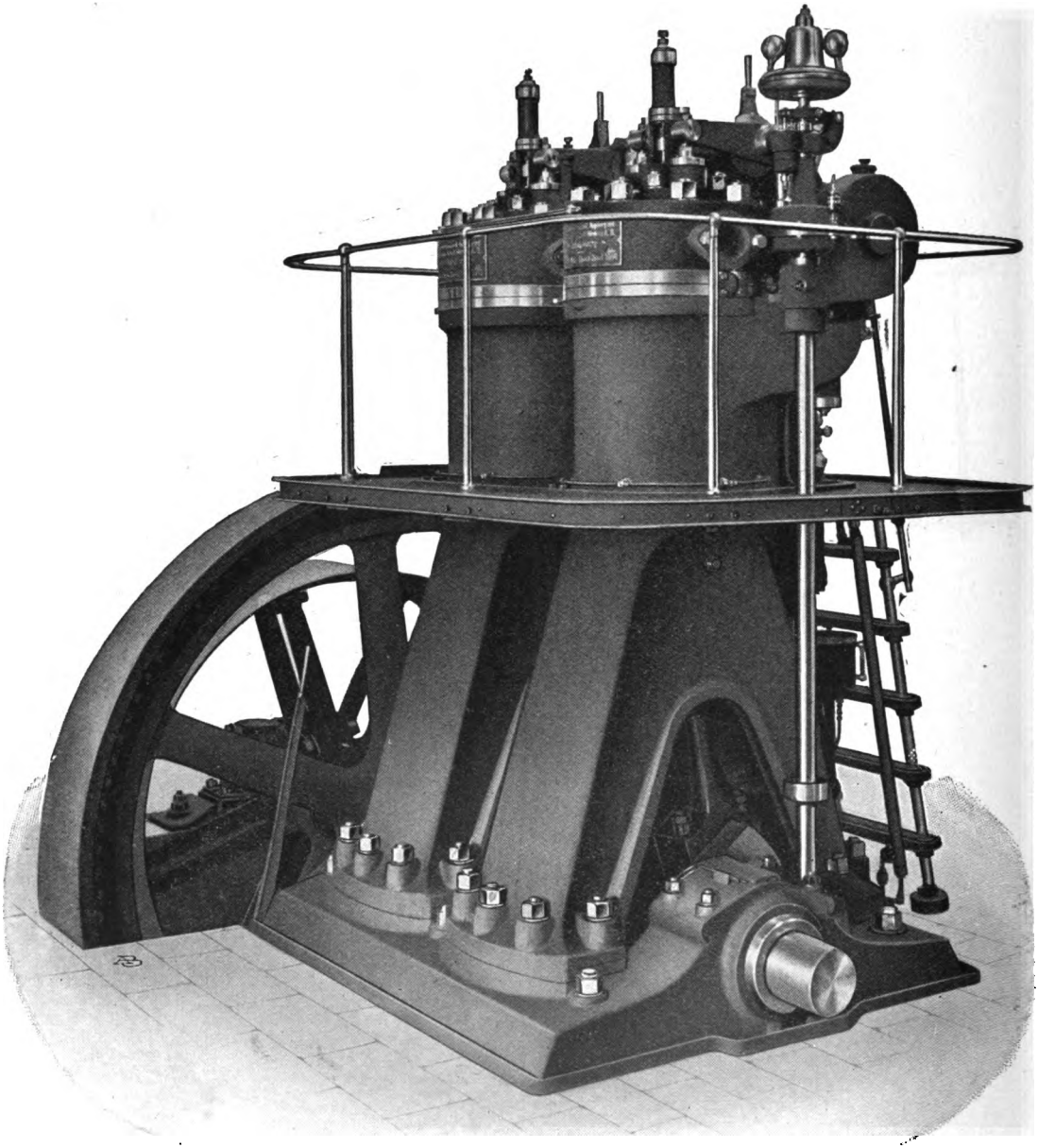

FIG. 143.—120 h.-p. Diesel engine, built by the Maschinenfabrik Augsburg (rear view).

Digitized by Google

Details of Diesel Engines, built by the Maschinenfabrik Augsburg.

One-cylinder engines.

Normal effective horse-power.	8	10	12	15	20	25	30	35	40	50	60	70	80	100	125	150	200
Speed . . . revs. per min.	270	255	250	235	215	205	195	190	180	170	165	160	160	160	155	155	140
Diameter of flywheel . ft. ins.	5 3	5 11	6 3	6 11	7 10	8 2	8 8	8 10	9 6	10 2	10 6	10 10	11 2	11 6	12 2	12 8	14 1
Outside measurements of engines: perpendicular to shaft . . ,,	6 7	7 3	7 11	8 6	9 2	9 10	10 6	10 10	11 2	11 6	11 10	12 2	12 6	12 10	13 2	14 1	15 9
Outside measurements of engines: parallel to shaft ,,	5 7	5 11	6 3	7 3	7 9	8 1	8 4	8 10	9 6	10 2	10 10	11 6	12 10	14 1	15 5	17 1	19 8
Outside measurements of engines: height above floor ,,	6 2	6 4	6 7	7 3	8 1	8 7	8 10	9 6	10 2	10 10	11 6	12 2	12 10	13 9	14 9	16 5	18 1
Necessary height of engine-room for erecting . ,,	9 2	9 10	10 6	11 6	12 10	13 6	14 1	14 9	15 5	16 9	17 9	19 0	21 4	22 8	25 3	26 7	29 6
Depth of foundations . ,,	3 4	4 0	4 7	5 3	5 11	6 3	6 7	6 7	6 11	7 3	7 3	7 10	8 6	9 2	9 10	10 2	10 6
Cost at railway station . . £ s.	250	285	335	435	485	540	600	660	730	850	975	1100	1230	1475	1750	2050	2800
Approximate weight[1]: net tons	1 9	2 4	3 0	4 4	5 5	6 6	8 0	9 5	11 0	13 5	16 5	19 0	21 5	26 0	33 0	40 0	60 0
Approximate weight[1]: gross ,,	2 4	3 0	3 6	5 0	6 4	7 5	9 0	10 5	12 0	15 0	18 0	21 0	24 0	29 0	36 0	44 0	65 0

Two-cylinder engines.

Normal effective horse-power.	30	40	50	60	70	80	100	120	140	160	200	250	300	400
Speed . . . . . revs. per min.	235	215	205	195	190	180	170	165	160	160	160	155	155	140
Diameter of flywheel . . . ft. ins.	6 11	7 10	8 2	8 8	8 10	9 6	10 2	10 6	10 10	11 2	11 6	12 2	12 8	14 1
Outside measurements of engines: perpendicular to shaft ,,	8 6	9 2	9 10	10 6	10 10	11 2	11 6	11 10	12 2	12 6	12 10	13 2	14 1	15 9
Outside measurements of engines: parallel ,, ,,	10 2	10 10	11 6	12 2	12 10	13 7	14 5	14 5	15 1	15 9	16 9	18 1	19 8	26 3
Outside measurements of engines: height above floor ,,	7 3	8 1	8 6	8 10	9 6	10 2	10 10	11 6	12 2	12 10	13 9	14 9	16 5	18 1
Necessary height of engine-room for erecting . . . . . ,,	11 10	13 0	13 5	14 5	15 1	15 9	17 1	18 1	19 4	21 8	23 0	25 7	26 11	30 2
Depth of foundations . . . . ,,	5 11	6 7	6 11	7 3	7 7	7 11	8 2	8 6	8 10	9 6	10 6	11 10	11 10	12 5
Approximate weight[1] . . . net tons	7	9	11	13	15	18	22·5	27·5	32	36·5	44	54	66	98
Approximate weight[1] . . . gross ,,	8·2	10·5	12·5	14·5	17	20	25	30	35	40	48	58	70	106
Cost at railway station . . . . £	750	850	950	1065	1180	1300	1525	1750	2000	2250	2725	3250	3800	5300

For fluctuations of speed of 1 in 30 for one-cylinder engines, and 1 in 70 for two-cylinder engines. Larger engines are with three and four cylinders.

Digitized by Google

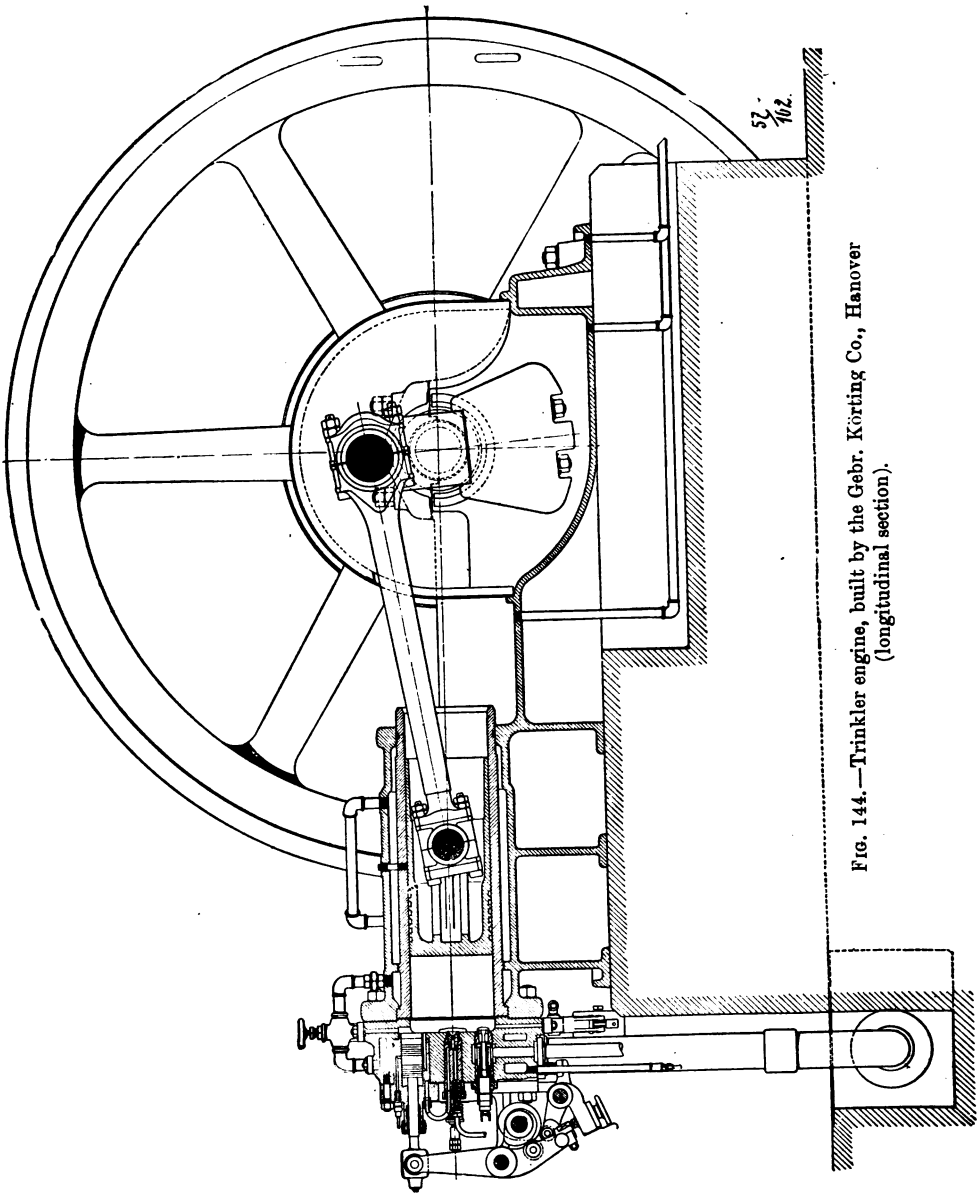

FIG. 144.—Trinkler engine, built by the Gebr. Körting Co., Hanover (longitudinal section).

Digitized by Google

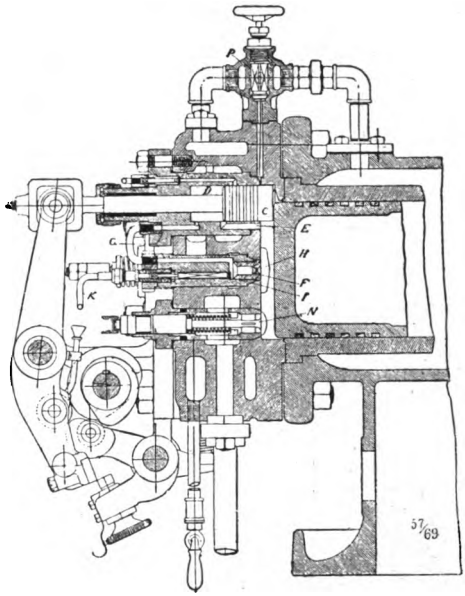

FIG. 145.—Trinkler engine, built by the Gebr. Körting Co., Hanover (section through valve).

C, Piston for delivering the highly-compressed air into the cylinder.
D, Chamber for the highly compressed air.
E, Equilibrium passage connecting the chamber D with the combustion chamber.
G, Overflow passage to F.
F, Spraying nozzle.
I, Fuel valve.
K, Fuel conduit.
H, Mouth of spraying nozzle.

The fuel consumption of a 12 h.-p. engine supplied with crude oil at a calorific value of 9863 calories (17,753 B.Th.U.) amounts to 221 grammes (·48 lb.) per horse-power hour.

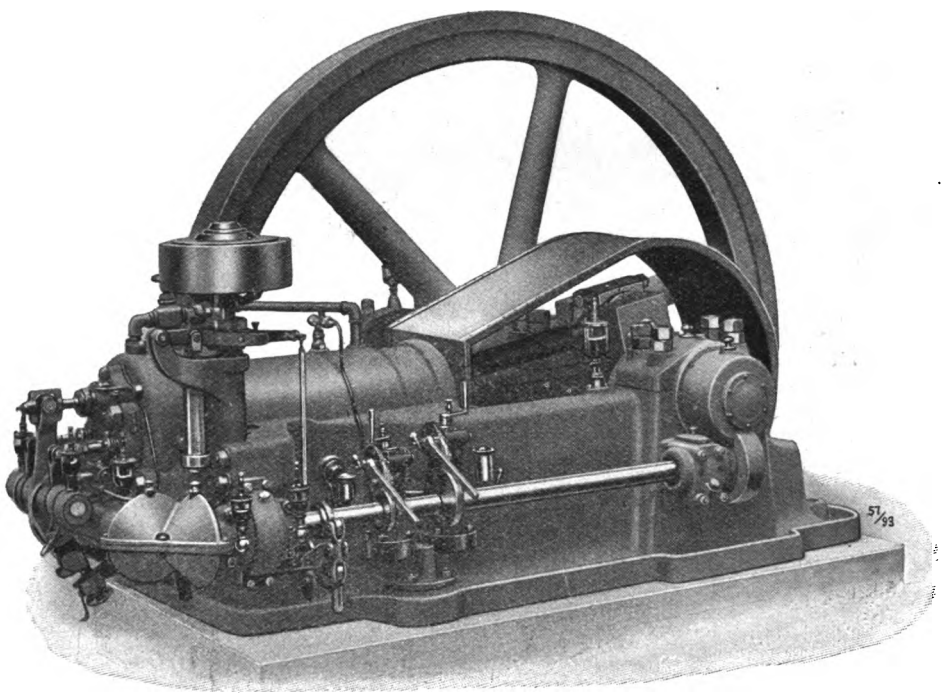

FIG. 146.—Trinkler engine, built by the Gebr. Körting Co., Hanover.

Digitized by Google

A very interesting paraffin engine has quite recently been brought out by the Bronsmotorenfabrik, Appingedamm, Holland. This motor works on a special system, in that a mixture containing a very slight proportion of fuel vapour is formed during the suction and compression period, the charge becoming gradually more inflammable as compression increases. By the combustion of this mixture, *i.e.* with an increase in temperature and violent collision of the separate particles, a quantity of fuel, which up to this stage has been prevented from mixing with air, is all at once atomised and

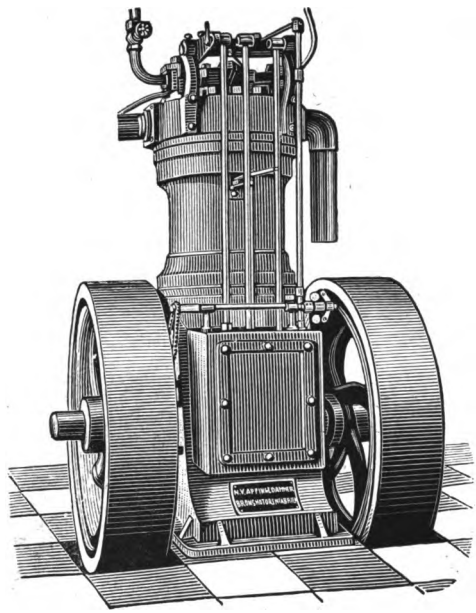

FIG. 147.—Paraffin and crude oil engine built by the Bronsmotorenfabrik, Appingedamm (Holland).

vaporised. The fuel vapour thus suddenly formed, comes in sufficiently intimate contact with the additional air to form a mixture which forthwith ignites. The combustion pressure is thus kept uniform for a short time, as in the Diesel engine. The fuel consumption is for these engines very moderate with the small sizes. An 8 h.-p. engine takes ¼ litre (·44 pint) per horse-power hour.

Compression is so great that ignition takes place automatically. The exhaust is clear and odourless.

Fig. 147 is a view of the engine. No details of construction were forthcoming.

Digitized by Google

CHAPTER VIII.

AUTOMOBILE ENGINES.

THE attempts made to drive vehicles on common roads by power, date further back than the invention of the steam engine for hauling loads on tracks. Even before Watt's time, attempts were made to apply the steam engine, in its very crude, early form, to road vehicles; French engineers had given the problem special attention. We find it recorded that as early as 1769, engineer Cugniot, of Paris, had succeeded in building a road vehicle fitted with a two-cylinder steam engine, with which he made trial runs in the streets of Paris, and obtained speeds up to 4 kms. (2·4 miles) an hour. English engineers also made many attempts to solve the problem. All these efforts, however, failed, for the steam engine was not then sufficiently developed to meet the many and varied requirements connected with road traffic.

A more favourable field for the development of the steam engine offered itself at that time in traction on rails, and in this direction the efforts of English engineers were soon crowned with success. George Stephenson succeeded in building a locomotive engine in 1829; this was put into actual service, and has, to this day, remained the model upon which all locomotives have been built.

In view of the experience thus gained with engines for traction on rails, it was thought possible to follow out the same type of engine for road vehicles, and experiments in this direction were continued down to the early 'sixties, but without any very satisfactory results. The road vehicle thus evolved was not an actual carriage for the transport of passengers and goods—this desideratum was not attained,—but the well-known, but then more or less primitive road locomobile, such as is used now for operating steam ploughs and for road rolling. It was only when the gas engine was introduced, and when liquid-fuel was found to be suitable in the place of gas for engines of this latter type (*i.e.* about the late 'seventies and early 'eighties the outcome being the petrol engine), that the correct method was forthcoming.

Numerous experiments carried out with rail traction engines, fitted with the earlier motors originally built for stationary purposes, had given satisfactory results. It was necessary, however, to still further improve the

Digitized by Google

motors by reducing their weight, and to increase their power by raising their speed; the reciprocating parts had also to be balanced, in order to overcome vibration of the vehicle frame.

The following remarks with regard to decrease in weight, will show to what extent progress has been made in the course of a few years.

The first petrol stationary engines utilised in 1880 for driving railway engines weighed about 500 kgs. (over 1100 lbs.) per horse-power. By 1886, owing to Daimler's improvements, the weight had been reduced to 40 kgs. (over 88 lbs.). In 1896, a further decrease in weight was obtained—for instance, in the case of the air-cooled bicycle motor built by the French Company, De Dion et Bouton; this weighed 12 kgs. (over 26 lbs.) per horse-power. At the present time the Société "Antoinette," Paris, builds engines which weigh only $1\frac{1}{4}$ to 1 kg. (2·75 to 2·2 lbs.) per horse-power. In the course of twenty-seven years, therefore, the weight has decreased from 1100 lbs. to 2·2 lbs. All these engines, further, work on the four-stroke cycle, only one half of a revolution to every two run by the engine being effective. It is quite possible that the valveless two-cycle engine, referred to above, will also be found to be applicable to vehicles; also that fuels will be obtainable which will allow of a higher compression than the petrol now used. If such changes occur, automobile engines will be largely increased in power; there are also probabilities that the weight of the engines will be reduced considerably below the present limit.

Besides their smaller weight, internal combustion engines have many other important advantages over steam engines, which render them specially suitable for driving road vehicles. Among these advantages may be mentioned their high thermal efficiency; the fact that they are always ready for working; the small amount of attention they require; the highly concentrated character of the liquid-fuel they use, which renders storage on the vehicle a matter of but little difficulty. All these are points satisfied only to a very small degree by steam engines.

But with all these advantages, internal combustion engines have certain disadvantages which should also be mentioned. They are not easily reversible, and are not readily started, as are steam engines; their power, also, decreases out of all due proportion when speed is much reduced. There is lacking also uniformity of design: so much so, in fact, that it cannot yet be said that a representative type has been evolved, as is the case, for example, in steam locomotives.

In the construction of automobile engines the following features may be said to have become standardised:—the vertical construction of the engines; the plurality of cylinders; the arrangement of the valves opposite each other; the mechanically operated inlet valve; the casting in one piece of cylinders, covers, and valve chests. There is still much diversity in ignition devices and carburettors.

Notwithstanding the rapid development in the construction of automobile engines, there is yet much room for further improvements. They are still

Digitized by Google

deficient, more especially as regards durability and economical working, features which, if satisfactorily secured, would render them suitable not only for pleasure and sport vehicles, but also for ordinary traffic and commercial purposes. The improvement in heavy vehicles is thus a wide field full of promise, open to young engineers. In any attempt made in this direction these workers will be helped by the fact that the gradually increasing use of the engine in daily life will lead to a more general understanding of all things mechanical.

Benz Automobile Engine.

When referring, in the third chapter, to the development of the petrol and paraffin engines, we gave details of the Daimler petrol engine, which has

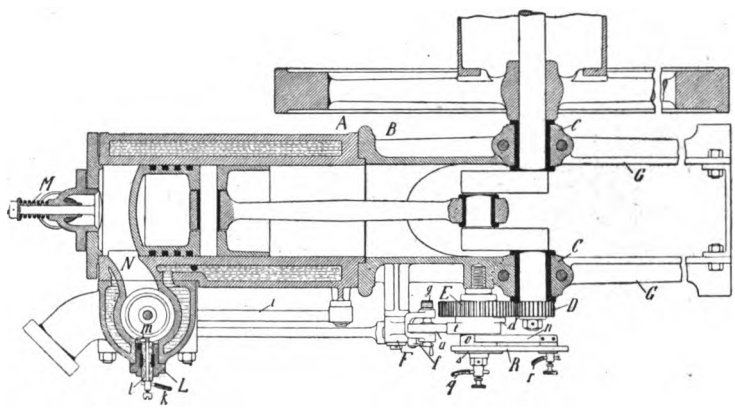

FIG. 148.—Benz automobile engine of 1896 (horizontal section).

A, Working cylinder; B, Engine frame; C, Crank shaft bearing; D, Small, and E, Large, pinions driving the valve gear; *e*, Exhaust cam; *d*, Compression relief cam; *f*, Hand crank for throwing out of gear the cam roller *a*, for operating the compression relief; *g*, Spring which presses against the disc *a*, for normal running; O, Contact disc for ignition; *n*, Contact springs; *q* and *r*, Wire leads; G, Extension of engine frame; L, Ignition mounting to suit the methods of ignition: *l*, Insulation; K, Wire lead; *m*, Sparking points; N, Exhaust passage; M, Additional air valve.

served as the model for the present automobile engines. Benz, the founder of the Rheinische Gasmotoren Aktiengesellschaft, Mannheim, carried out, contemporaneously with Daimler, experiments with the object of constructing an engine suitable for road vehicles. He first made trials with a horizontal engine built exactly on the pattern of the stationary ones for driving his road vehicles, and adhered to this pattern, with but slight alterations, up to the middle of the 'nineties.

This older engine is illustrated in figs. 148 and 149. The charge was formed in the carburettor then commonly used, in which the air was drawn through a large quantity of petrol.

Digitized by Google

De Dion-Bouton Automobile Engine.

Another important automobile engine was the French De Dion et Bouton engine introduced in the first half of the 'nineties.

Aluminium was used, for the first time, for certain parts of these engines. For the first time, also, batteries were used for supplying current for ignition, and cooling ribs cast perpendicularly to the cylinder axis, which, besides having a good cooling effect, made it possible to reduce the thickness of the cylinder walls.

As new features, mention may also be made of the ignition plug, the use of the circuit contact-breaker instead of the Neef hammer, and the increased

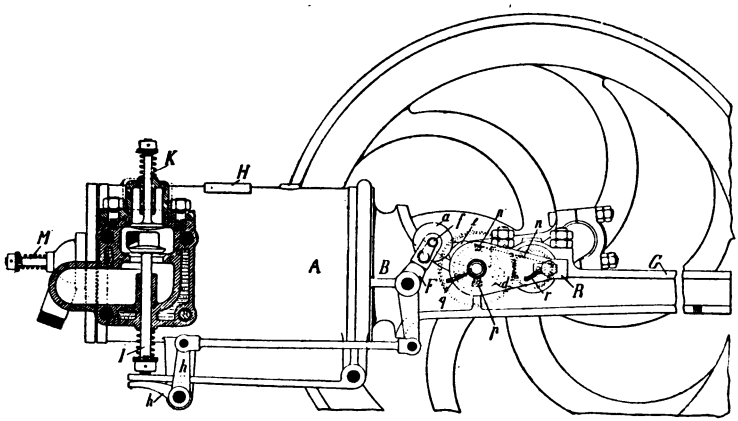

FIG. 149.—Benz automobile engine of 1896 (side view).

R, Lever for retarding ignition; *h*, Exhaust lever; *i*, Intermediate lever for reducing side-thrust on the exhaust valve spindle; I, Exhaust valve; K, Automatic inlet valve; *n*, Contact spring; *p*, Make and break device; *a*, Roller on exhaust valve cam lever; F, Exhaust valve cam lever.

speed, up to 1500 revolutions per minute and over. This engine, as will be seen, contained a number of important improvements. All these stood the test of actual service, and are in use at the present time.

Figs. 150 and 151 illustrate the De Dion-Bouton engine as originally designed.

The Canello-Dürkopp Automobile Engine (1900).

Another forerunner of the present type of automobile engines for heavy vehicles is the Canello-Dürkopp system, illustrated in figs. 152 and 153. As will be noticed, this is a two-cylinder engine, both cylinders being close together and cast in one piece; the placing of the valve chests on opposite sides is also an arrangement now followed.

Digitized by Google

The engine still works with hot-tube ignition and automatic inlet valve. A marked disadvantage of this type is the practice of keying the cranks in line on the same side of the crank axis and the use of a heavy counterbalance. With this arrangement the working-strokes may be made to follow one another regularly, but balancing by means of a counterweight on the crank

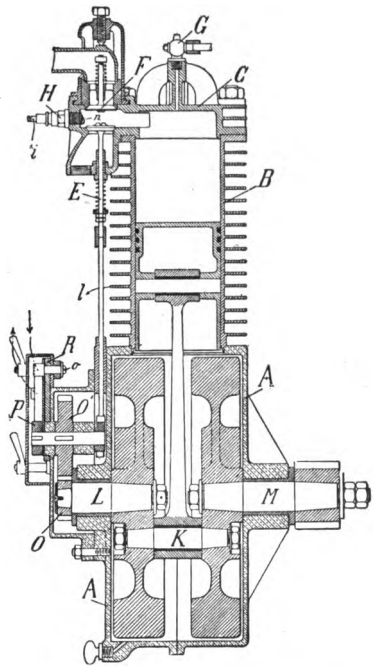

FIG. 150.—De Dion-Bouton engine in its original form (vertical section).

A, Crank chamber of aluminium; B, Working cylinder with radiating ribs; C, Combustion chamber; E, Exhaust valve; F, Inlet valve; G, Cock for reducing compression to facilitate starting; H, Sparking plug; L M, Shaft journals; K, Crank pin; O, O′, Distribution pinions; P, Make and break disc for ignition; R, Movable disc for retarding ignition; *n*, Sparking points; *i*, Current lead.

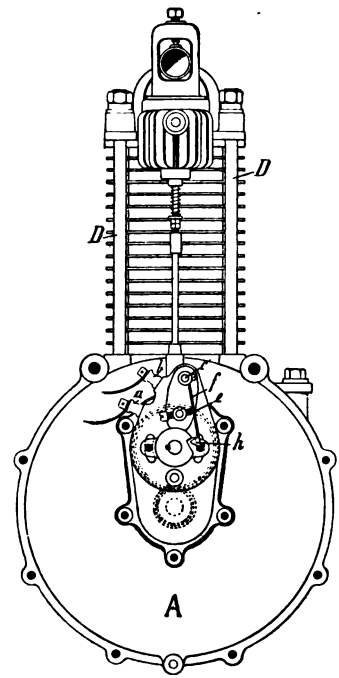

FIG. 151.—De Dion-Bouton engine (side elevation).

A, Crank chamber of aluminium; D, Bolts connecting the cylinder cover and the crank chamber; *a*, *b*, Current leads for ignition; *c*, Pins of contact breaker spring; *e*, Adjustable screw contact point; *f*, Contact breaker spring; *h*, Head of contact breaker spring.

is at the best very imperfect. The cranks of such engines are now keyed at 180°, and balancing is thus automatically effected by the employment of similarly shaped parts of equal weight, in as perfect a manner as possible. The working-strokes, however, are no longer regular, the two following each other immediately, after which there occurs an interval of a full revolution. Then the two working-strokes again follow one another directly, and so on.

Digitized by Google

Notwithstanding this irregular succession of working-strokes, the vibrations on the vehicle frame are not nearly so great as in the case of engines with cranks keyed side by side at 0° in line and balanced by a counterweight.

A special feature of this engine, and one not of sufficient value to be adhered to, was the method of speed-governing. This was a hit-and-miss system of governing, by keeping the exhaust valve closed and working about of the exhaust gases inside the cylinder, in the manner alluded to in the fourth chapter, which deals with the various methods of governing.

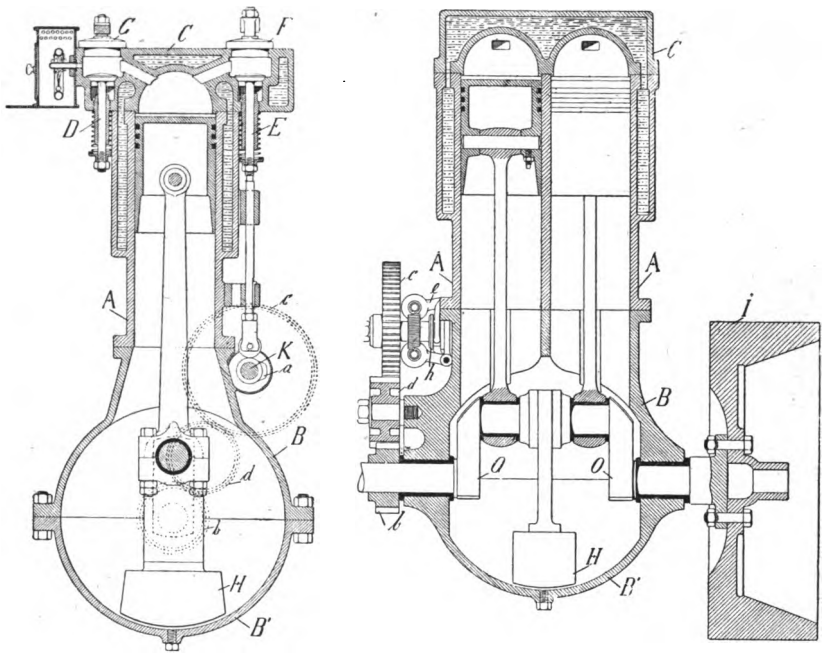

FIGS. 152 and 153.—Canello-Dürkopp automobile engine.

A, Working cylinder; B, Crank chamber; C, Cylinder cover with valve-chests cast on; D, Automatic inlet valve; E, Exhaust valve; F, Exhaust valve cover; G, Inlet valve cover; H, Counterbalance; I, Flywheel; K, Lay shaft; O, Crank webs; *b*, *d*, *c*, Cam shaft gear; *h*, *e*, Governor which shifts the lay shaft in order that the exhaust valve may be kept closed.

Recent Automobile Engines. Four-cylinder Engine of the Adlerwerke, vorm. Heinrich Kleyer, Aktiengesellschaft, Frankfort-Main.

(Figs. 154, 155, and 156.)

The engine casing is cast in one piece with the gear case, as shown in fig. 156. The engine is fastened by a separate steel base plate (fig. 155) to the vehicle frame; by this means a stiff and safe support is obtained for the crank shaft, forming at the same time a covering for the mechanical parts against dust and dirt.

Digitized by Google

All the gears run in oil. The cylinders are cast together in pairs, surrounded by a common water-jacket. The ignition devices and carburettor are easy of access below the casing.

Ignition is by the Bosch high-tension device. The carburettor and governor are described in the fourth chapter.

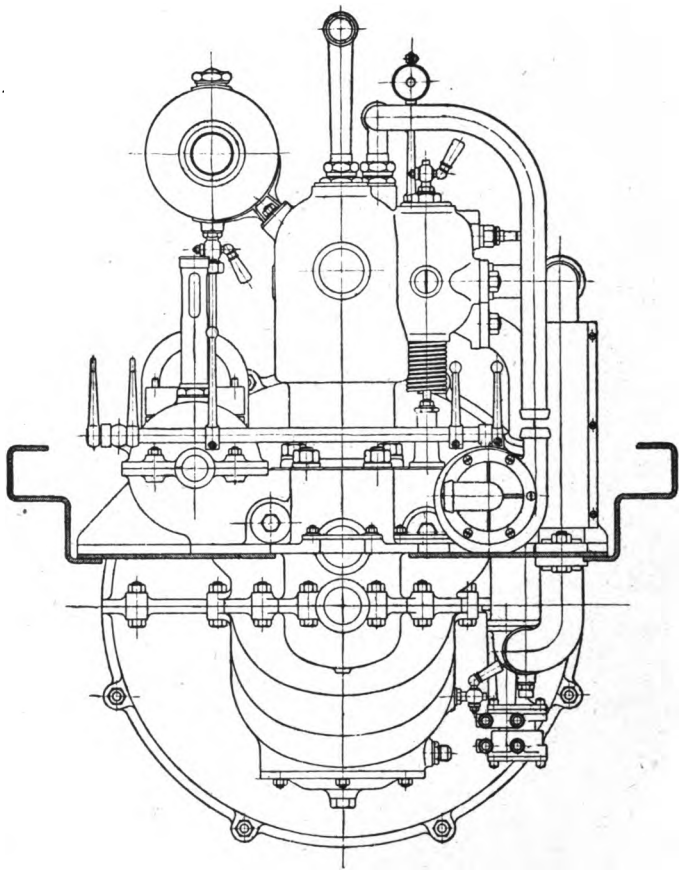

FIG. 154.—Four-cylinder engine of the Adlerwerke, vorm. Heinrich Kleyer A.-G., Frankfort-Main (front view).

Digitized by Google

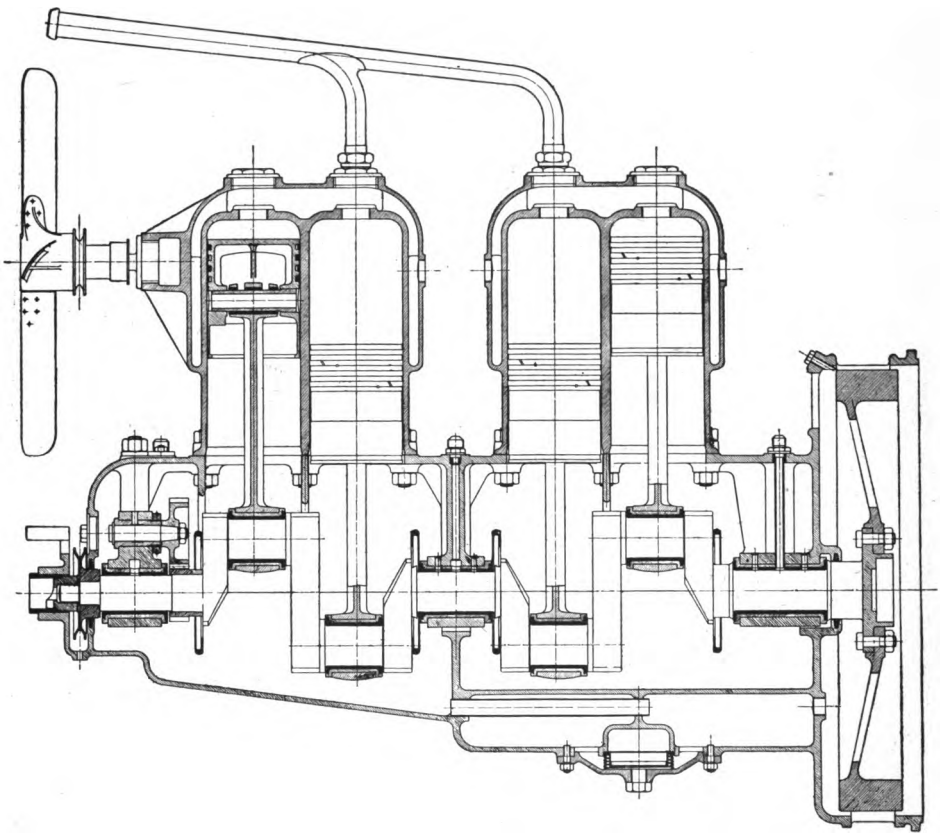

FIG. 155.—Four-cylinder engine of the Adlerwerke, vorm. Heinrich Kleyer A.-G., Frankfort-Main (vertical section).

Digitized by Google

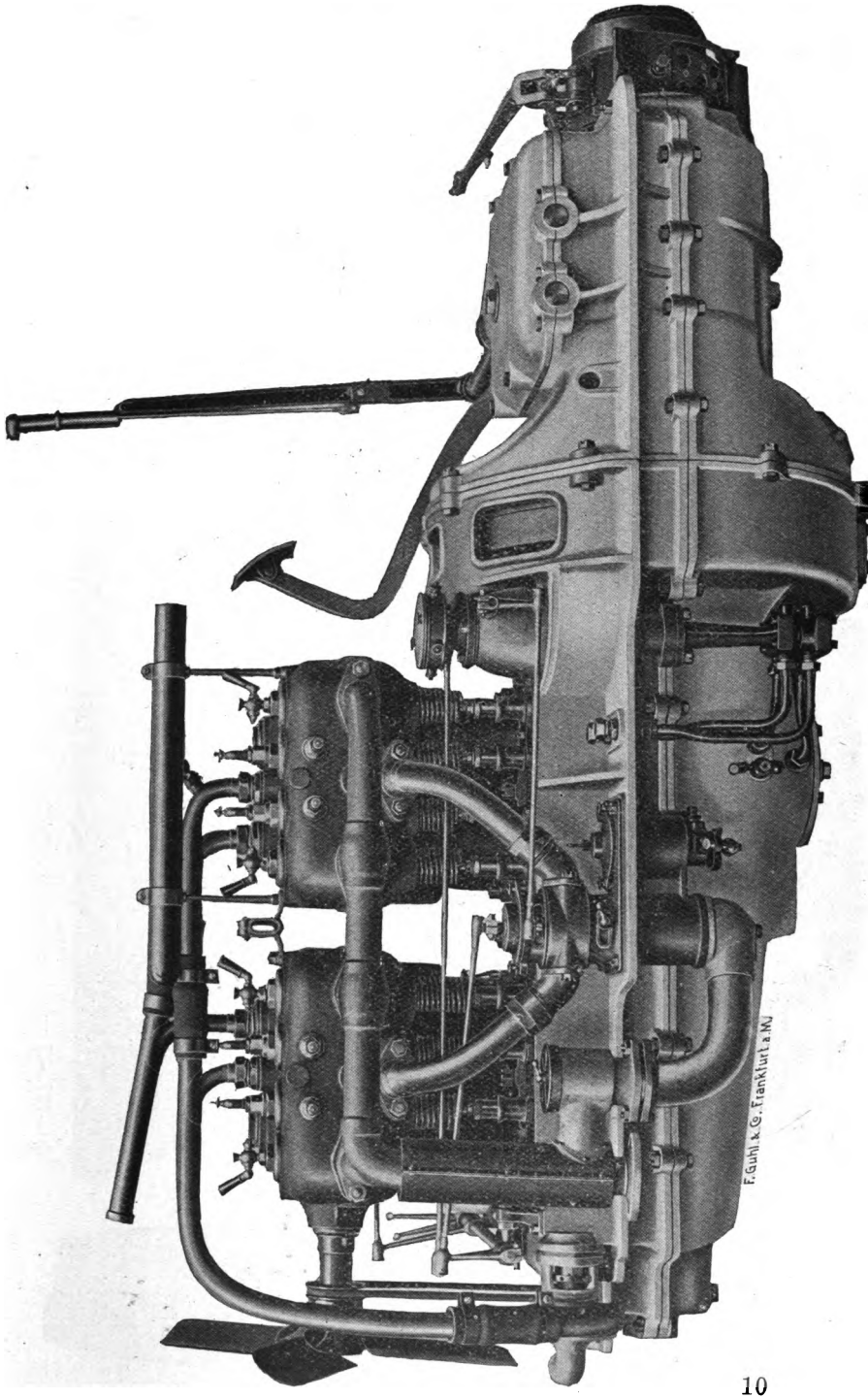

FIG. 156.—Four-cylinder engine of the Adlerwerke, vorm. Heinrich Kleyer, A.-G., Frankfort-Main (view of combined casing for engine and gear).

Digitized by Google

Four-cylinder Engine of the Daimler-Motorengesellschaft, Cannstatt.

(Figs. 157, 158, and 159.)

The valves are arranged on opposite sides of the cylinder. The carburettor is described in the fourth chapter. Ignition is by contact-breaker, in connection with the Bosch magneto-electric apparatus.

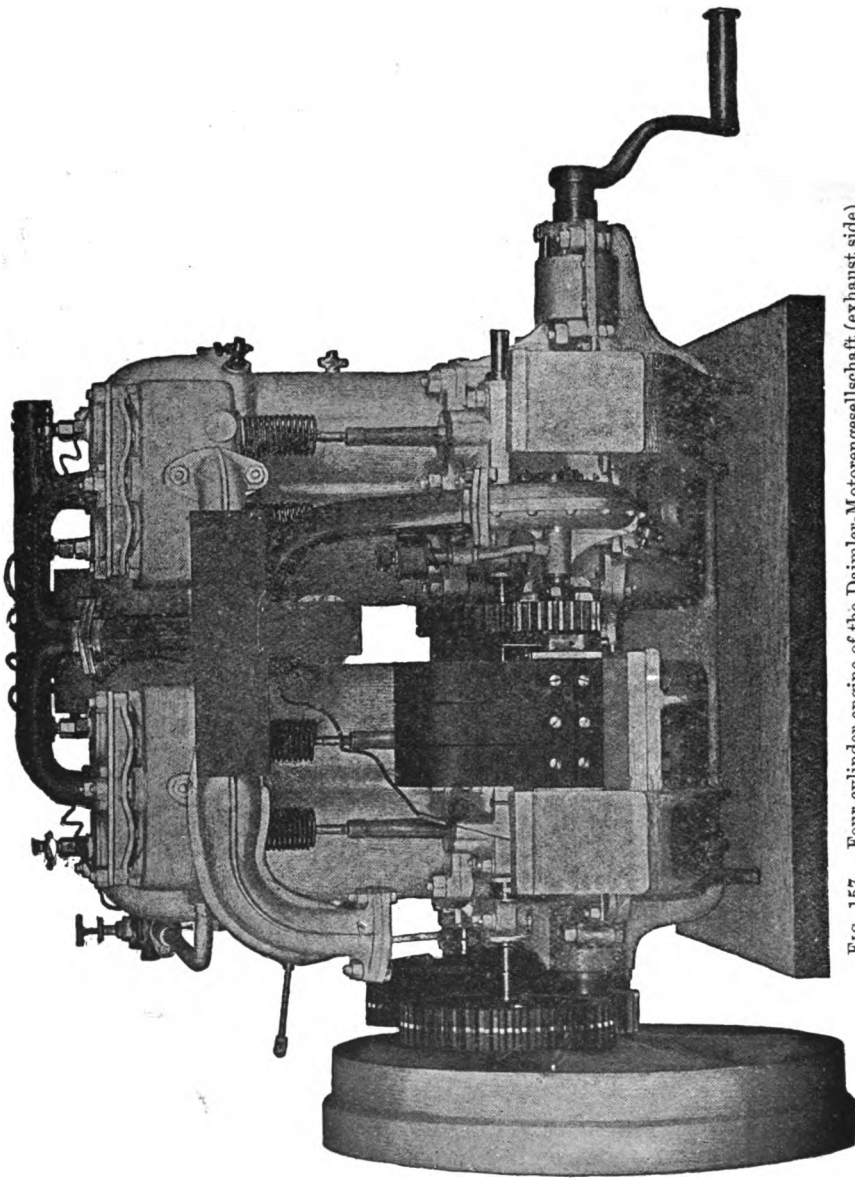

FIG. 157.—Four-cylinder engine of the Daimler-Motorengesellschaft (exhaust side)

Digitized by Google

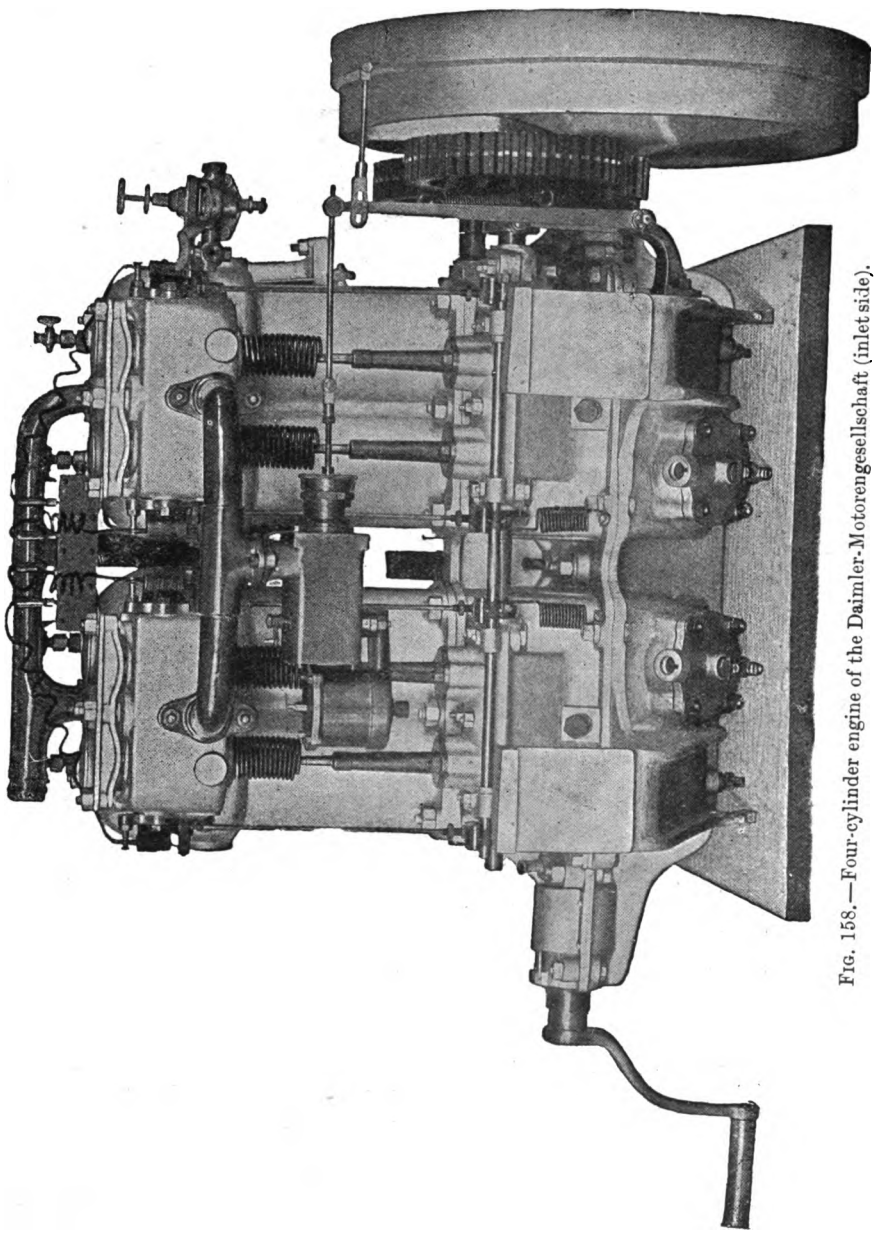

FIG. 158.—Four-cylinder engine of the Daimler-Motorengesellschaft (inlet side).

Digitized by Google

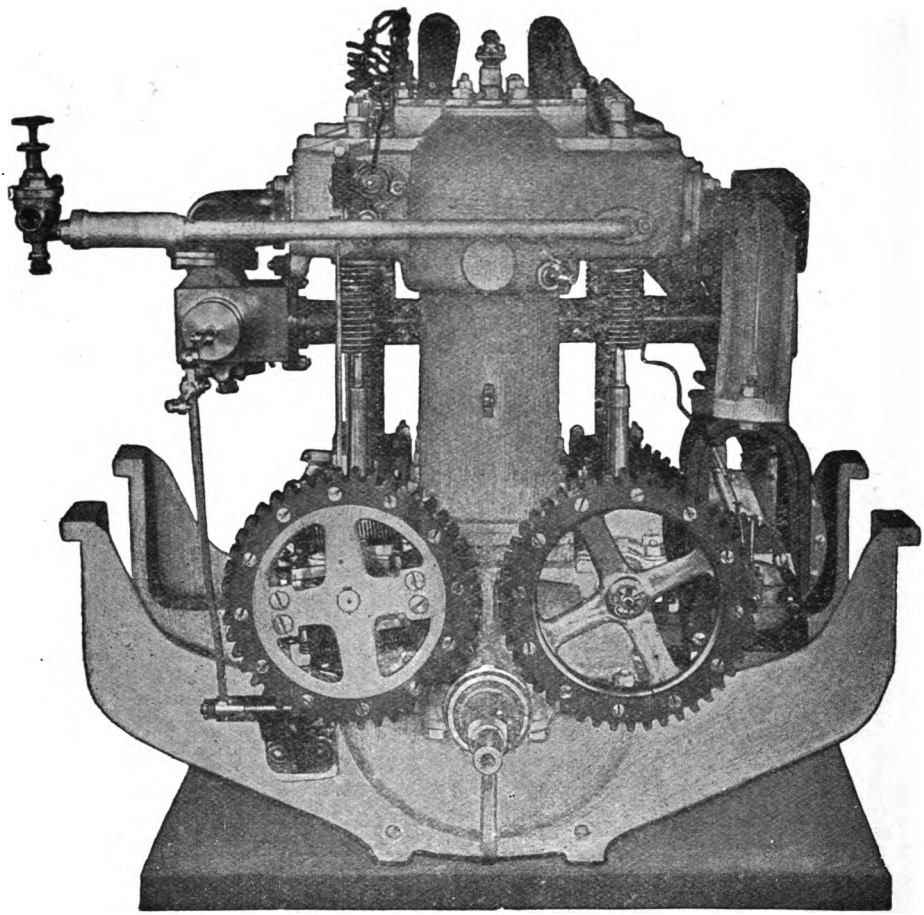

FIG. 159.—Four-cylinder engine of the Daimler-Motorengesellschaft (front view).

Six-Cylinder "Hexe" Engine, built by Achenbach & Co., Hamburg.

(Figs. 160 to 163.)

In this engine the cylinders are cast separately, and the valves are placed on opposite sides of the cylinder. The cooling jacket over the combustion chamber is fitted with an easily removable cover. The crank shaft is of nickel steel; the cranks are keyed symmetrically at an angle of 120°. Ignition takes place in the following order, in cylinders 1, 2, 3, 6, 5, 4, and is effected by contact breaking. When desired, the engines are provided with double ignition, being fitted with both contact breaker and plug.

The Claudel carburettor is used; this allows of a variation in speed between 120 and 1800 revolutions.

Digitized by Google

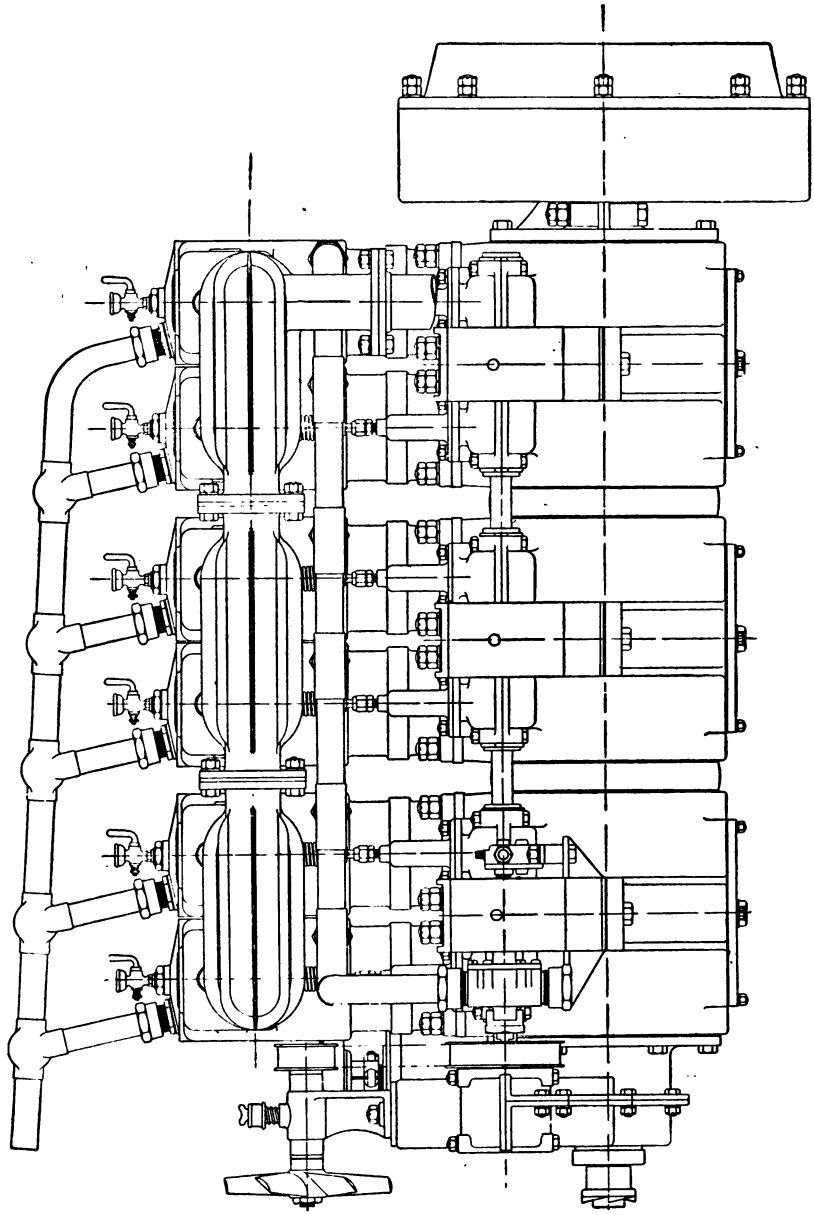

Fig. 160 — Six-cylinder "Hexe" engine, built by Achenbach & Co., Hamburg (side elevation).

Digitized by Google

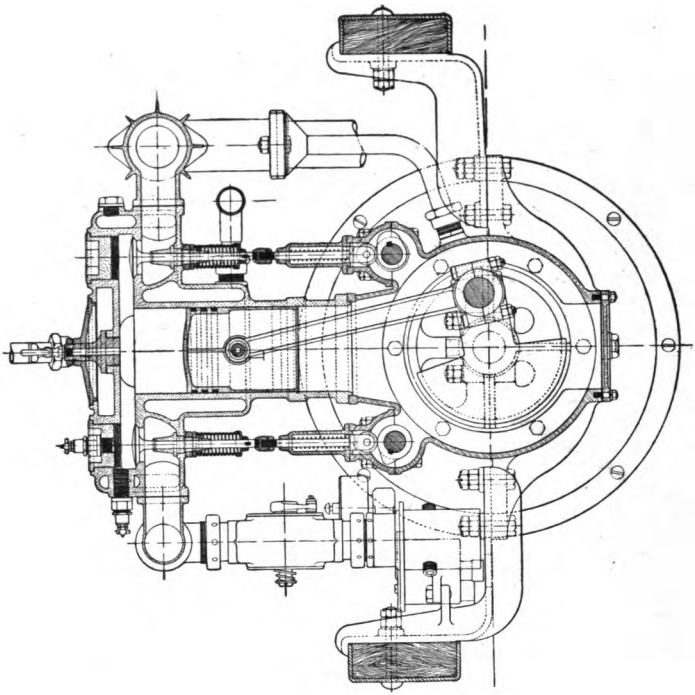

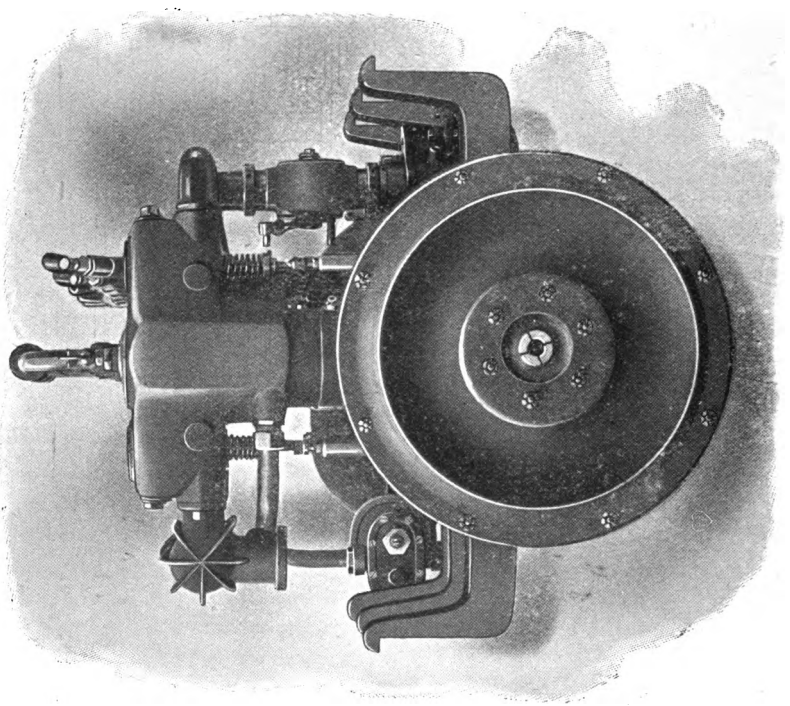

Figs. 161 and 162.—Front view and vertical section of the six-cylinder "Hexe" engine, built by Achenbach & Co., Hamburg.

Digitized by Google

FIG. 163.—Crank shaft of the six-cylinder "Hexe" engine, built by Achenbach & Co., Hamburg.

Four-cylinder Engine of the "Bayard" Automobile, built by A. Clément, Levallois, Paris.

(Figs. 164 to 167.)

The cylinders of this engine are cast separately, and the valves are fitted on opposite sides. Ignition is on the Simms-Bosch system. The carburettor is of the Clément pattern, described in the fourth chapter.

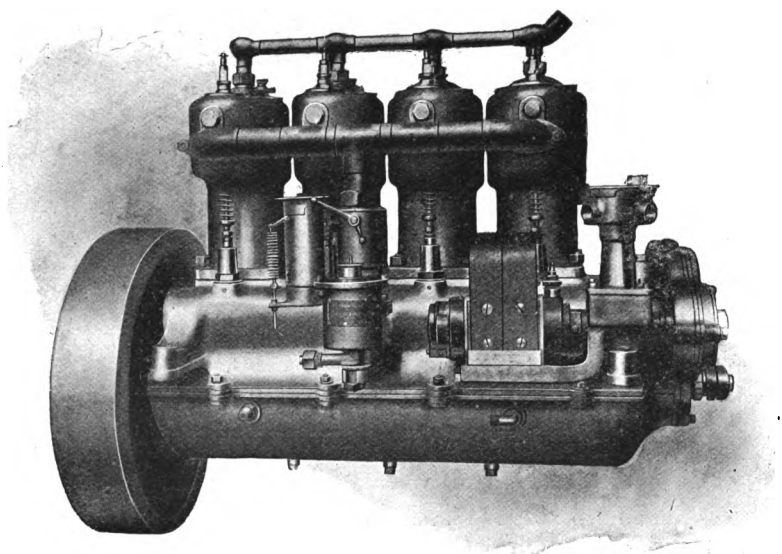

FIG. 164.—Four-cylinder "Bayard" engine (side view).

Digitized by Google

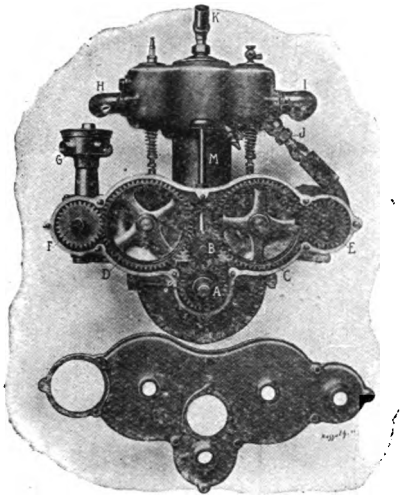

FIG. 165.—Four-cylinder "Bayard" engine (front view).

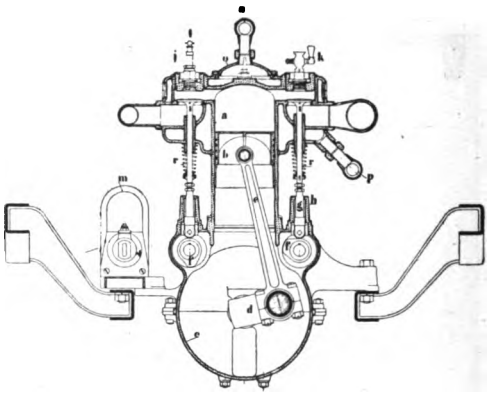

FIG. 166.—"Bayard" engine (vertical section).

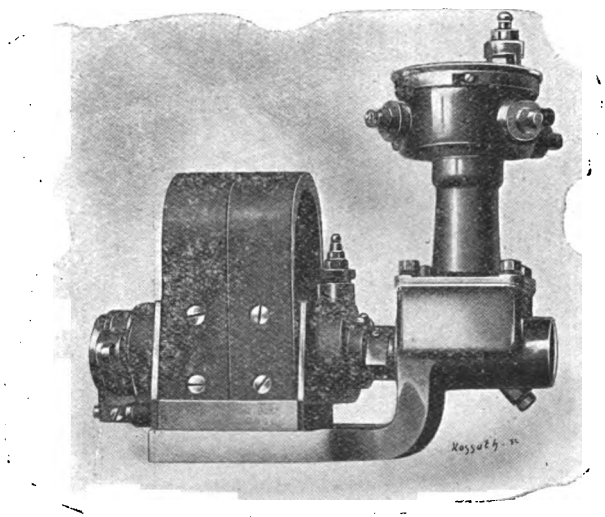

FIG. 167.—"Bayard" engine (Simms-Bosch ignition device).

Four-cylinder Engine of the Maschinenbau-A.-G., vorm. Ph. Swiderski, Leipzig-Plagwitz.

(Fig. 168.)

This engine runs with paraffin; it is built on the design of the Swiderski paraffin engine described in the third chapter, and is used for driving heavy vehicles, such as those used by Messrs E. Troost, Berlin, for their undertaking in South-West Africa.

Digitized by Google

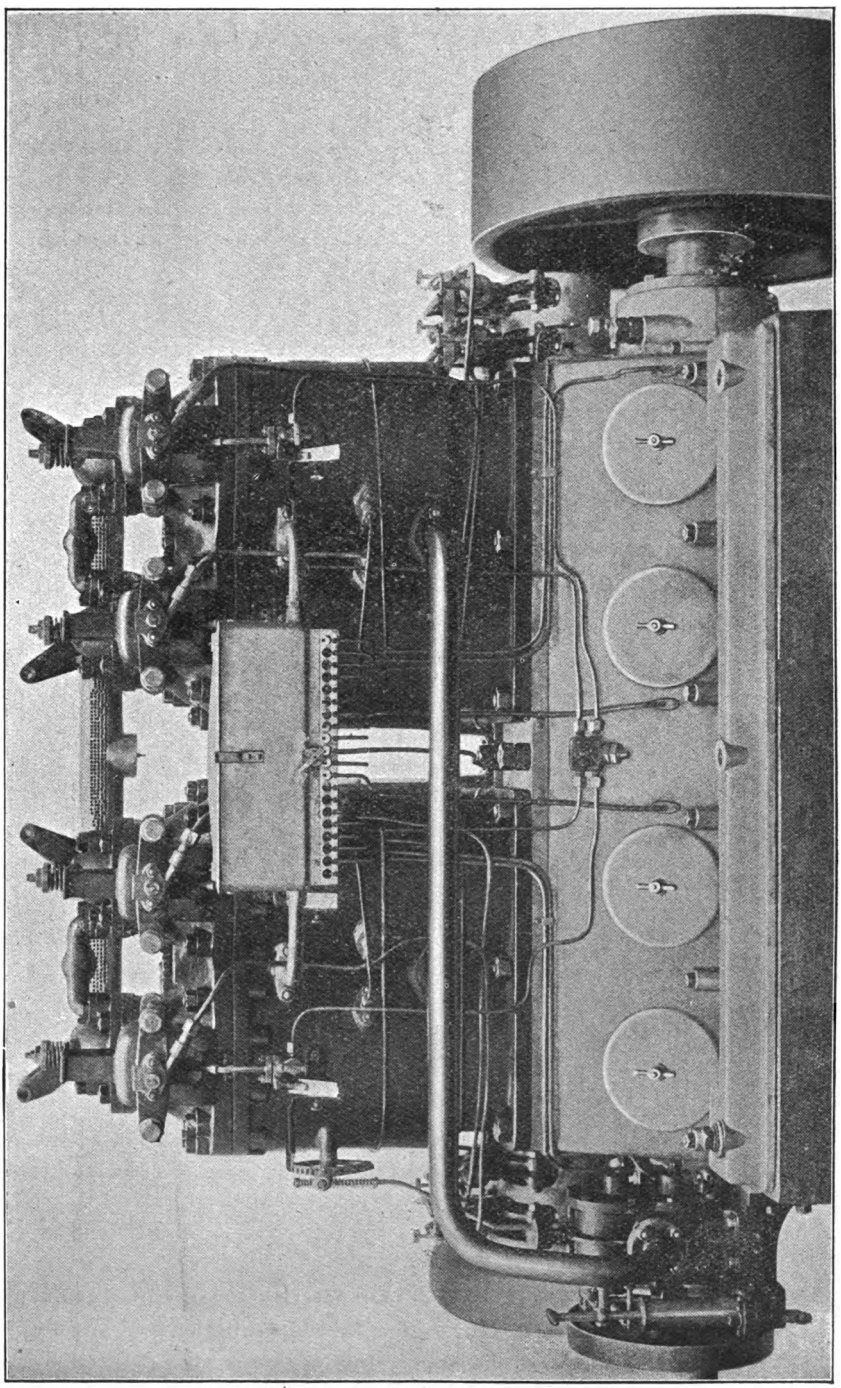

FIG. 168.—Paraffin engine for heavy cars, 70 h.-p., built by the Maschinenbau-A.-G. vorm. Ph. Swiderski, for Messrs E. Troost, Berlin, Hamburg, and South-West Africa.

Digitized by Google

Automobile Engine of the Nürnberger Motorfahrzeugfabrik "Union" Ltd., Nuremberg.

(Figs. 169 to 171.)

These engines run at comparatively low speeds; they have only one cylinder for powers of from 4 to 12 h.-p., two cylinders from 12 to 16 h.-p., and four cylinders for 16 to 30 h.-p. As will be seen from fig. 170, the one cylinder engine works with piston contact ignition as described in the fifth

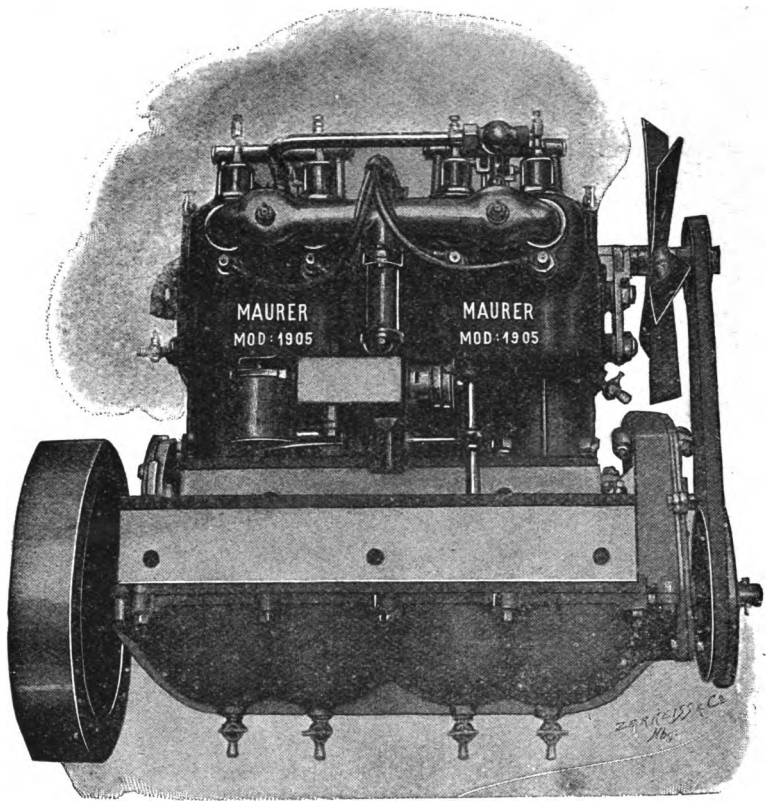

FIG. 169.—Four-cylinder "Maurer-Union" engine (side view).

chapter. The pin fitted to the bottom of the piston comes in contact, at the end of the stroke, with the interrupter lever, and breaks contact. Current is supplied by a Bosch magneto.

Recent Cycle Engines.

The prototype of the engines as now used for the propulsion of cycles and light cars, is the De Dion-Bouton engine, to which allusion has already been made. Besides its light construction, this engine is characterised by the system of air-cooling adopted, cooling being facilitated by the radiating

Digitized by Google

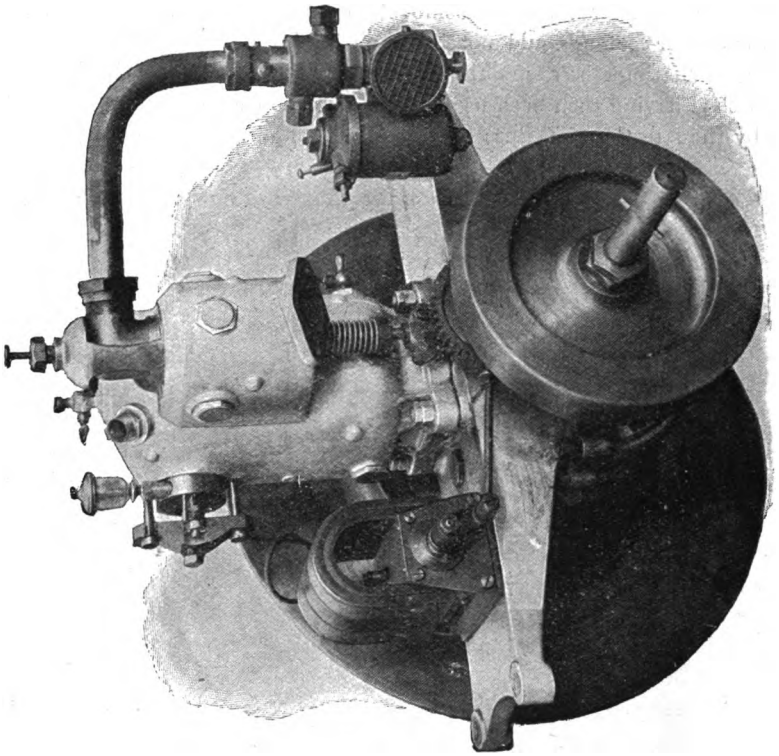

FIG. 171.—One-cylinder "Maurer-Union" engine (side view).

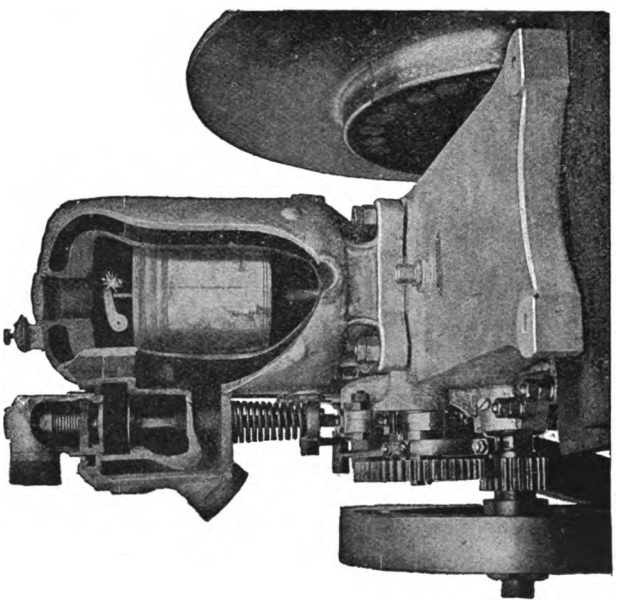

FIG. 170.—One-cylinder "Maurer-Union" engine (section in cylinder).

Digitized by Google

ribs cast on to the cylinder, the combustion chamber, and valve chests. The fact that water-cooling could not be employed in small combustion engines, and that radiating ribs were quite effective, was well known in the 'seventies, this method having then been used in the Bisschop engine, built about that time by the late Firm of Buss and Sombart, Magdeburg. In this instance,

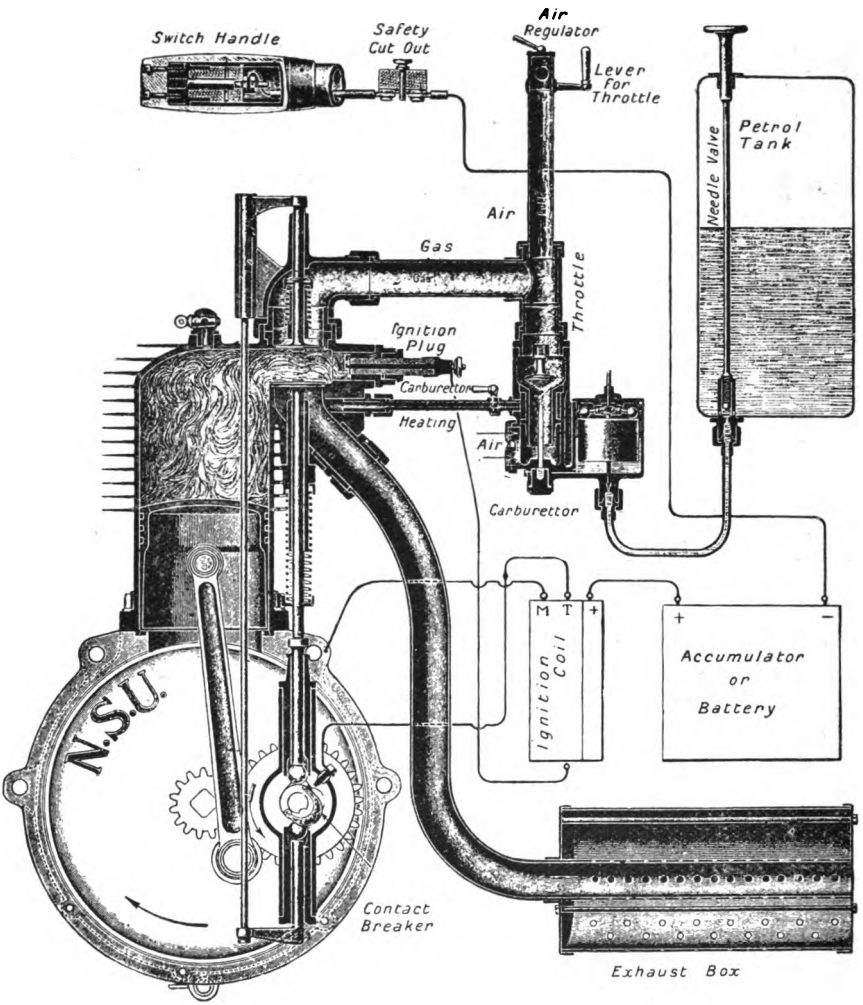

FIG. 172.—Neckarsulmer cycle engine.

the cylinder was made with longitudinal ribs, to satisfy special conditions. In cycle engines, which work in the open and move in a current of air at a high speed, transverse ribs had naturally to be adopted, as these allow the air to strike direct into the spaces between the ribs.

Without water-cooling, the construction of the engine is greatly simplified; the vehicle is also lightened considerably, and at the same time made much

Digitized by Google

more independent. These considerations are of special importance in the case of engines for air-ship propulsion.

There are, of course, limits to air-cooling. Its applicability depends upon the dimensions of the cylinder and the speed of the engine, therefore upon the quantity of fuel which is burned in a given time. For some time now, the current of air passing has been increased by fans; in this connection it should be noticed that in order that there should be a sufficient circulation of air, and that cooling should not be effected only on one side of the engine, two fans are now usually provided, one in front and one in the rear, the latter having for its object to carry off the air blown on the engine. The air

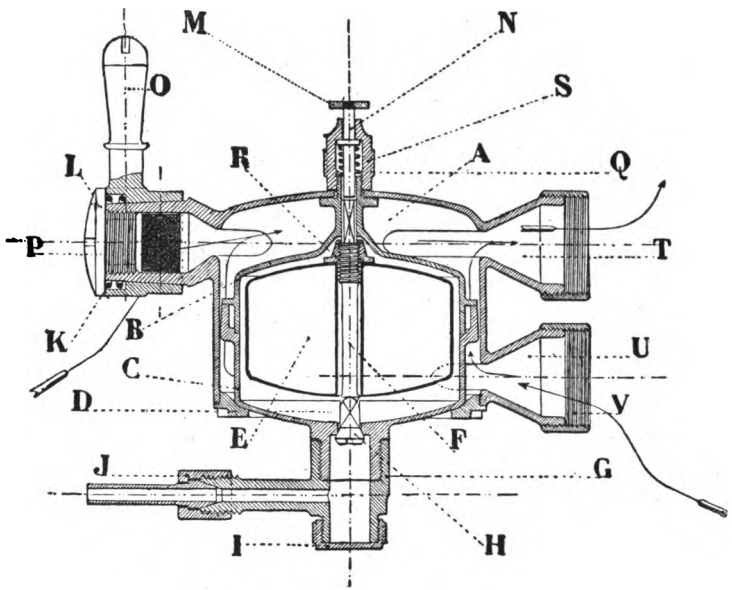

FIG. 173.—Carburettor of "La Motosacoche."

A, Mixture chamber; B C, Float chamber; D, Screwed joint for A, B, C; E, Float; F, Float valve spindle; G J, Fuel supply; H, Float valve; K, Air regulation; M N, Dipper for driving down the float on starting the engine; O, Lever for air supply regulation; P, Cold air supply; T, Connection to inlet valve; U, Main air pipe.

can only have a cooling effect when it is, to start with, as cool as possible, and it is not to be expected that, in the case of an engine of several cylinders placed one in the rear of the other in the direction of travel, the rear cylinder can be as effectively cooled as the first one. The heat to be dispersed by cooling can be estimated as follows:—

Of the 10,300 calories contained in a kilogramme (18540 B.Th.U.) of petrol used in these engines, about 15 per cent. is converted into work, 30 per cent. goes out with the exhaust gases, and no less than 55 per cent. has to be removed by cooling. The development of air-ship engines will lead to greater attention being paid to air cooling, with a view to its improvement.

Fig. 172 illustrates, diagrammatically, the cycle engine of the Neckar-

Digitized by Google

sulmer Fahrradwerke. The carburettor and ignition device of this engine are described in the fourth and fifth chapters.

Cycle Engine "La Motosacoche," built by H. and A. Dufaux & Co., Geneva, Switzerland.

(Figs. 173 to 177.)

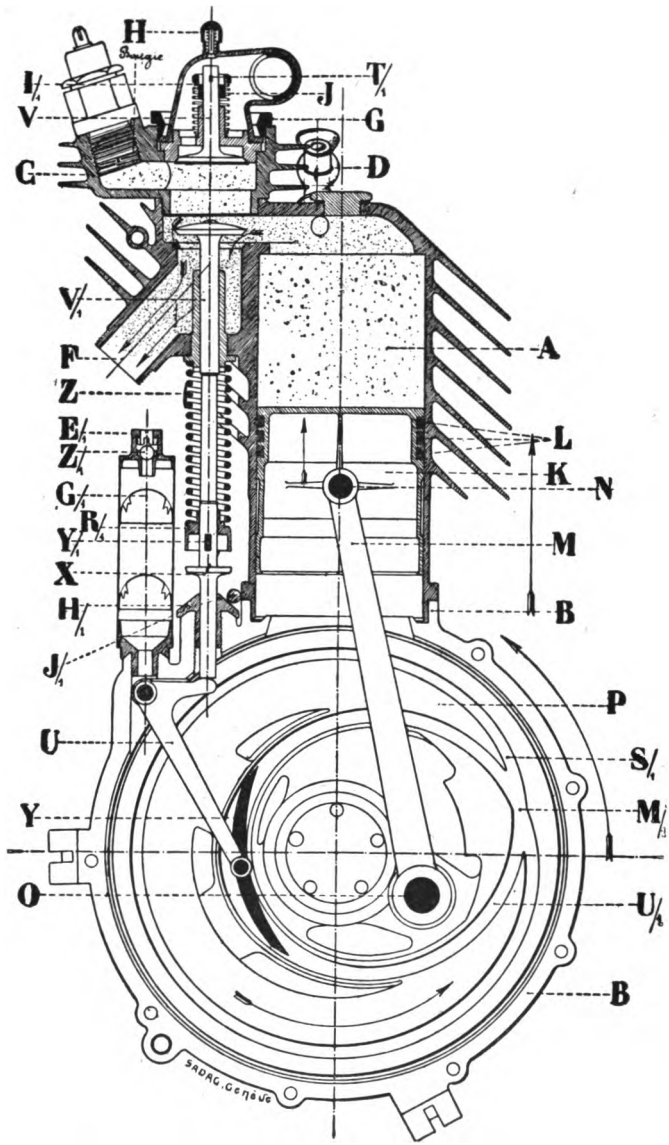

FIG. 174.—Vertical section of cycle engine built by H. and A. Dufaux & Co., Geneva.

Digitized by Google

The engines and fittings are mounted in a three-cornered frame of the shape of a cycle frame, so that every ordinary bicycle can be converted into a motor cycle by insertion of the engine frame. The valve chests are on the

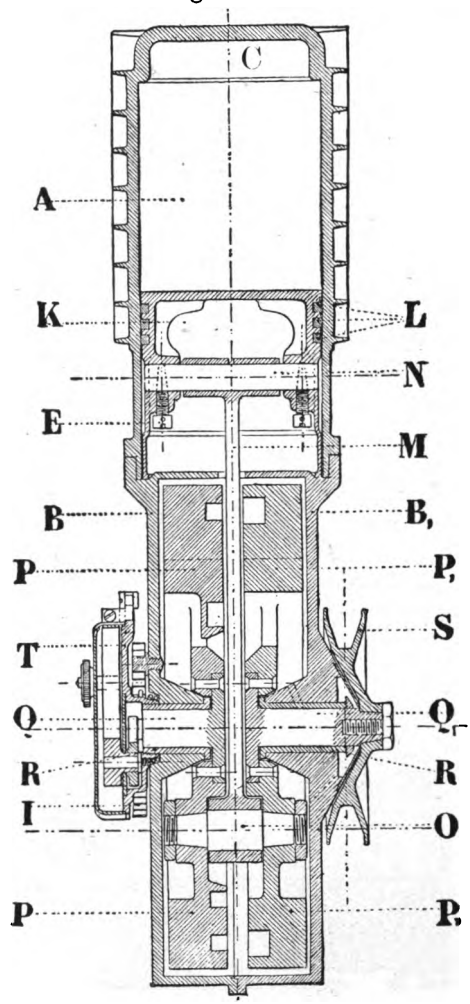

FIG. 175.—Cross-section of cycle engine built by H. and A. Dufaux & Co., Geneva.

FIGS. 174 and 175.—A, Cylinder; B, Casing; C, Cylinder head; D, Starting cock; E, Regulating screw for equalising pressure in crank chamber; F, Exhaust pipe; G, Nut for holding down the inlet valve mounting; G_1, Pressure equaliser; H_1, Guide for exhaust valve rod; M_1, Central point of cam lever slot; P P, Disc of crank; S, Driving pulley; U, Crank lever for working the exhaust valve; V, Inlet valve; V_1, Exhaust valve; X, Valve lifter; Y, Block working in the cam slot.

front side, and are therefore struck first by the air. The exhaust valve is operated by a cam lever working in a slot. Toothed gears are only used for operating ignition.

The $1\frac{1}{4}$ h.-p. engine only weighs $7\frac{1}{2}$ kgs. (16·5 lbs.).

Digitized by Google

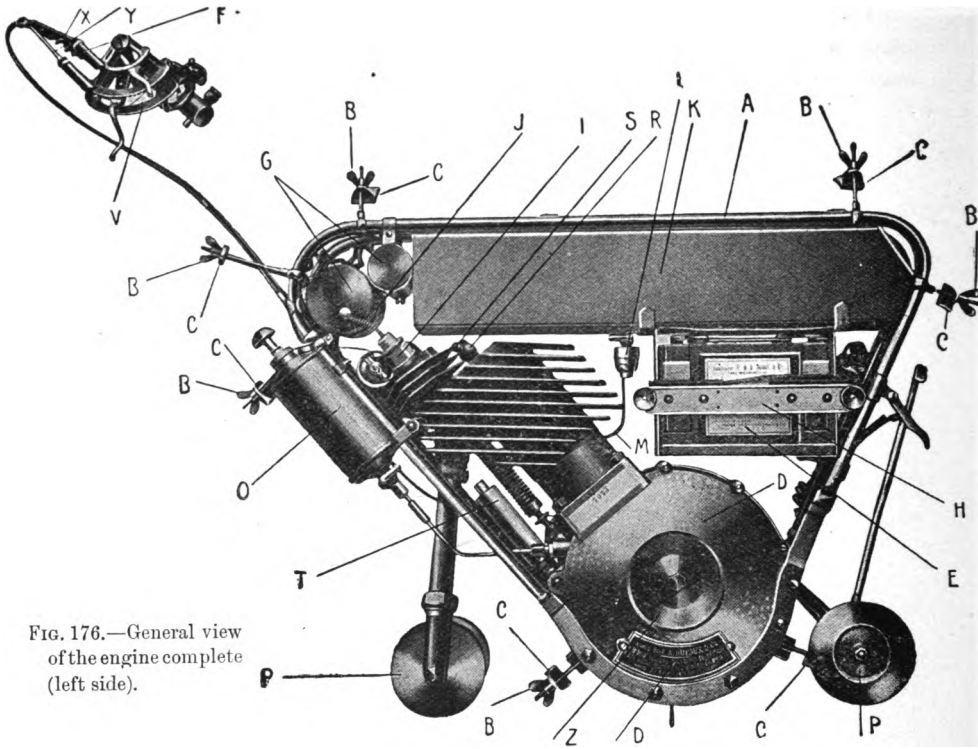

FIG. 176.—General view of the engine complete (left side).

FIG. 177.—General view of the engine complete (right side).

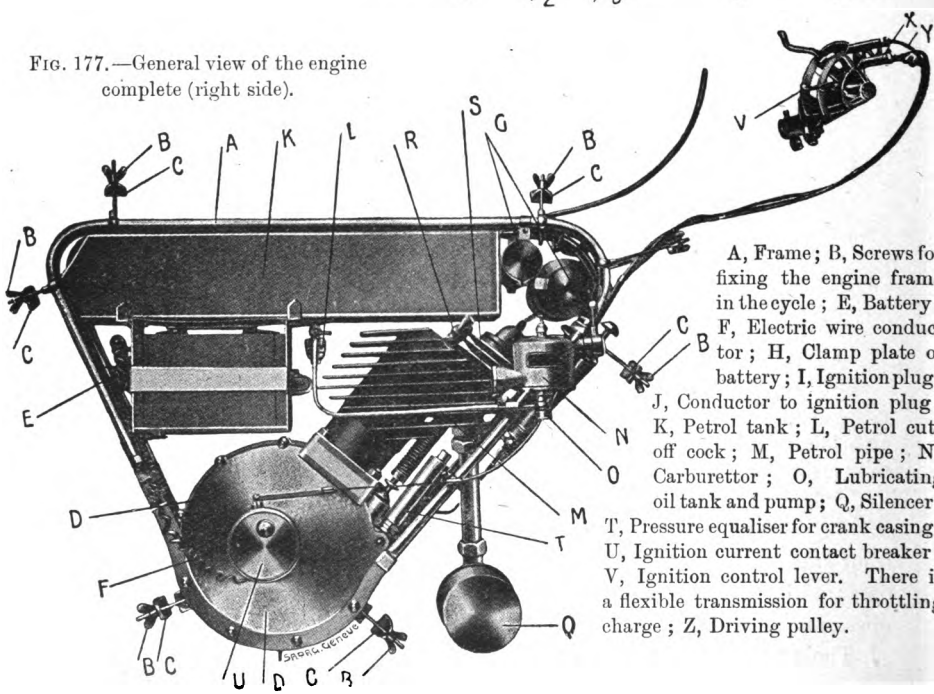

A, Frame; B, Screws for fixing the engine frame in the cycle; E, Battery; F, Electric wire conductor; H, Clamp plate of battery; I, Ignition plug; J, Conductor to ignition plug; K, Petrol tank; L, Petrol cut-off cock; M, Petrol pipe; N, Carburettor; O, Lubricating oil tank and pump; Q, Silencer; T, Pressure equaliser for crank casing; U, Ignition current contact breaker; V, Ignition control lever. There is a flexible transmission for throttling charge; Z, Driving pulley.

Digitized by Google

Cycle Engine of the Wanderer-Fahrradwerke, Schönau, near Chemnitz.

(Fig. 178.)

This engine develops $2\frac{1}{2}$ h.-p. at 1800 revolutions. Ignition is by magneto and ignition plug.

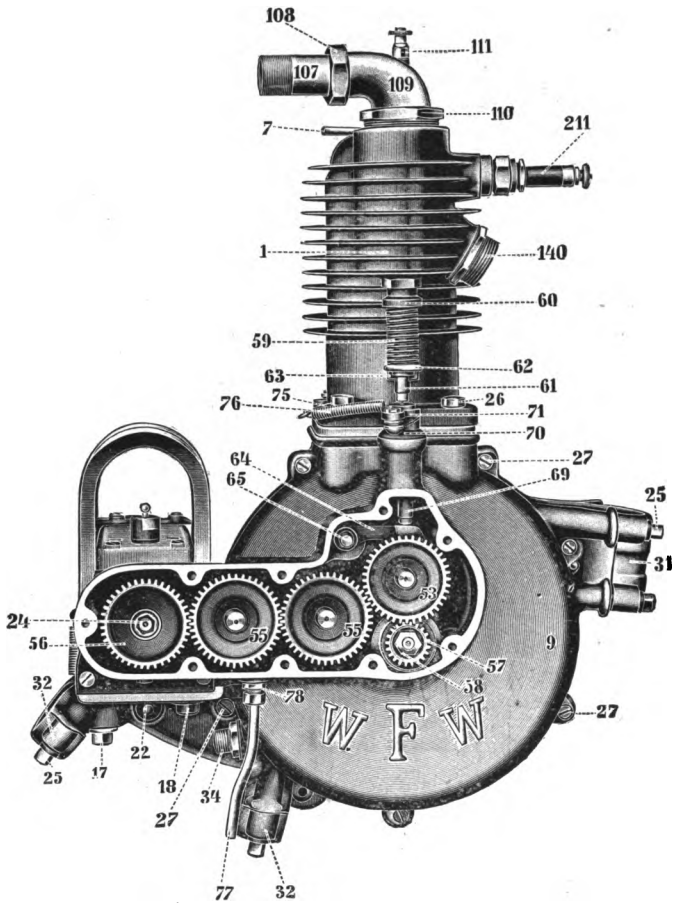

FIG. 178.—Cycle engine of the Wanderer-Fahrradwerke.

1, Cylinder; 140, Exhaust connection; 107, Charge entrance; 61, Exhaust valve spindle; 211, Ignition plug; 69, Exhaust valve rod; 65, Exhaust valve lever; 57 and 53, Gears driving the valve cams; 55 and 56, Gears for working magneto.

Digitized by Google

Engine of the Maschinenfabrik "Cyklon," Rummelsburg, near Berlin.

(Fig. 179.)

This engine develops 3·5 h.-p. The radiating effect of the cooling ribs is increased by a fan.

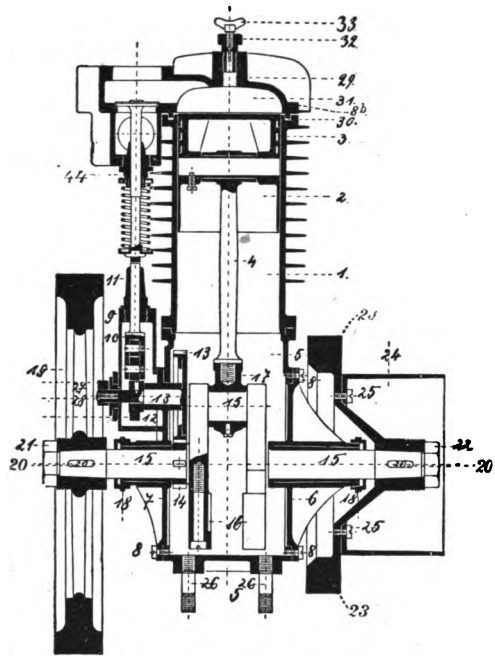

FIG. 179.—Engine of the Maschinenfabrik "Cyklon."

1, Working cylinder ; 2, Piston ; 4, Connecting rod ; 13, Gear pinions ; 15, Crank shaft ; 16, Counterbalance ; 44, Exhaust valve.

Digitized by Google

CHAPTER IX.

SHIP, BOAT, AND AIRSHIP ENGINES.

When in the commencement of the last century the American inventor Robert Fulton had succeeded in building a steam engine suitable for ship propulsion, it was soon found that the steam engine was suited to the larger classes of ships only. For boats and small vessels, there was not sufficient space available for the boiler and for stoking, and the first cost and the cost of working were besides much too high to allow of the general use of small steam-driven craft. A suitable source of power for small craft was only forthcoming on the advent of the liquid-fuel internal combustion engine. Engines of this type were found to be of sufficiently low cost; they occupied comparatively little space, and required no very skilful attention in service. In these new engines, however, reversibility and automatic starting were qualities the lack of which was badly felt. Propellers with reversible blades or reverse-acting propellers had to be resorted to, in order to cause the craft to travel with certainty either forward or backward. Risk of fire, which in stationary installations is only, comparatively speaking, an unimportant consideration, had to be taken seriously into account in the case of boat engines. The lack of a fuel completely free from fire risk is one of the main causes which have hitherto prevented motor-driven boats and ships being used to the extent that would be desirable for maritime traffic and fisheries. In this instance, as in the case of transport by land, safe working and cheapness are requirements which remain still to be fulfilled. Most of the types of engines would not stand the rough handling they would be likely to have to put up with at sea. The first internal combustion engines for the propulsion of boats were built by Daimler; in 1886, he fitted a boat with a 2 h.-p. two-cylinder engine he had built specially for that purpose, and this gave good results. He subsequently further successfully developed his petrol engine for marine work. The design of these first petrol boat engines is shown in figs. 180 and 181.

The carburettor used was on the pattern of that described on page 26. The exhaust valve was operated by the sliding piece *ff'* working in the groove *gg'*. From the accompanying illustrations, it will be seen that governing was effected by cutting out the charge by holding the exhaust valve off its seat. The lever which thus held the exhaust valve open by the

Digitized by Google

action of the governor is marked *m n*. A valve *b* is shown in the piston; this was operated on the outer dead centre and allowed the entrance of fresh air. Ignition was by a platinum tube.

Two-cylinder Paraffin Boat Engine, built by the Maschinenbau A.-G., vorm. Ph. Swiderski, Leipzig-Plagwitz, in 1895.

This engine works with paraffin and heavy oils in the same way as the Capitaine engine described in the third chapter. In this engine also, the

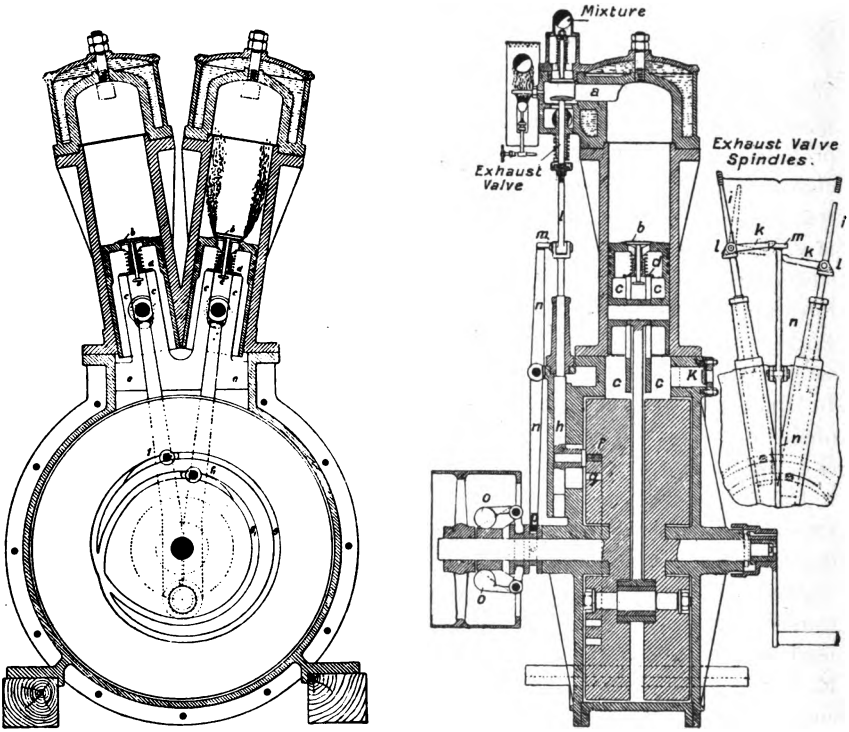

FIGS. 180 and 181.—Daimler boat engines built in 1890.

cranks are set at 0°. Speed is regulated by hand lever. These engines are built by the firm in large numbers, both for use in the country and for export, and give good results. These engines are shown in figs. 182 and 183.

"Sleipner" Boat Engine, built by the Gebr. Körting A.-G., Körtingsdorf-Hanover.

(Figs. 184 and 185.)

This engine can work with petrol, benzol, alcohol, or paraffin. When using the latter fuel, the engine has to be started with petrol, and run with

Digitized by Google

it until the combustion chamber has reached the required temperature. Ignition in the case of engines up to 30 h.-p. is high-tension magneto-electric. For larger engines, the low-tension magneto-ignition is used. If desired, plug ignition and an accumulator are added to the latter.

Oiling is not effected by splash-lubrication from the crank chamber, but every part has its own lubricator by which the required amount of oil is distributed.

The silencer is water-cooled.

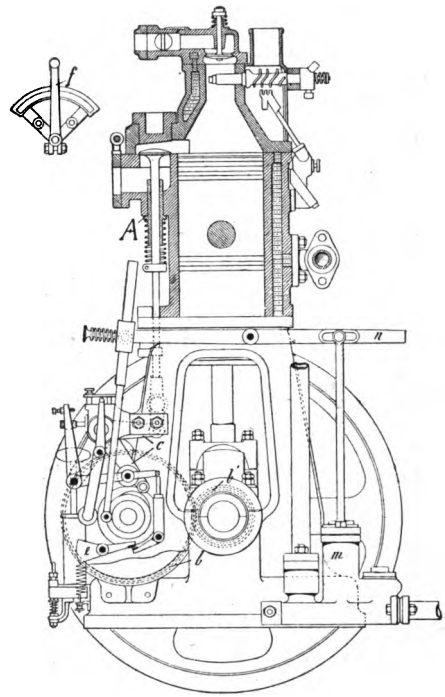

FIG. 182.—Vertical section.

FIGS. 182 and 183.—Swiderski boat engine.

A, Exhaust valve chest; b, b_1, Reduction gear; c, Exhaust valve lever; d, g, h, i, Hand lever regulation; a, Lay shaft; f, Hand lever for speed governing; p, q, n, Starting device; o, Tightener for starting belt; m, Lenz pump.

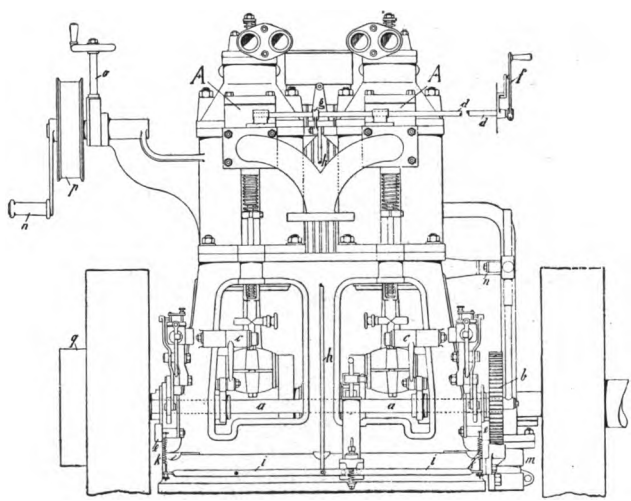

FIG. 183.—Side elevation.

Digitized by Google

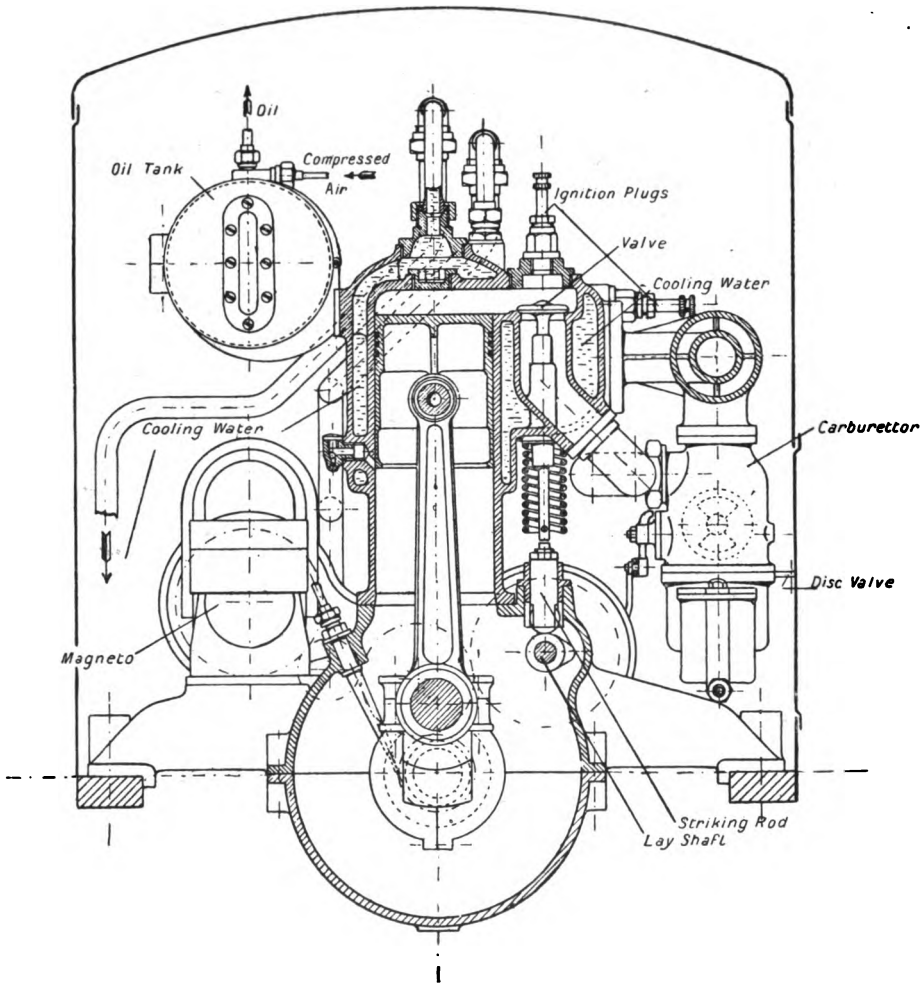

FIG. 184.—"Sleipner" boat engine (section through cylinder).

Digitized by Google

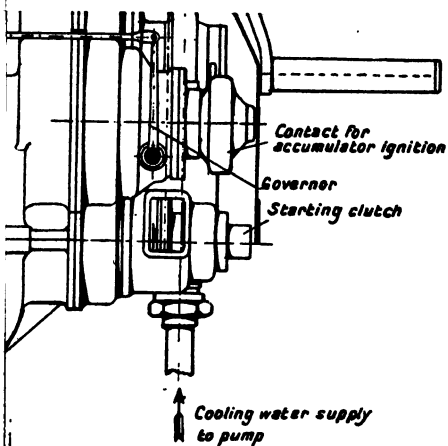

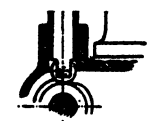

Low tension Ignition Mechanism.

for
ing.

Digitized by Google

LIBRARY
OF THE
UNIVERSITY
OF
CALIFORNIA

Digitized by Google

Details of "Sleipner" Boat Engines.

Pattern	2S. 91	2S. 106	2S. 130	2S. 146	4S. 91	4S. 106	4S. 130	4S. 146	4S. 170
Number of cylinders	2	2	2	2	4	4	4	4	4
Speed: revs. per minute	800	800	700	700	800	800	700	700	700
Brake horse-power, effective horse-power.									
Petrol 0·68 to 0·7 specific gravity	6	10	15	20	12	20	30	40	60
Paraffin	5·5	9	14·5	19·4	11	18	29	39	58
Alcohol 90 per cent. volume, with 20 per cent. benzol	5·5	9	15	20	11	19	30	40	58
Approximate weight in lbs.									
Engine with flywheel	463	595	910	1100	640	840	1323	1760	2314
Starting and reversing device	188	220	375	440	220	400	485	397	775
Protective casing	66	77	133	155	133	144	155	177	210
Accessories	77	89	99	110	110	133	133	144	165
Fuel consumption per horse-power-hour, in lbs.									
Petrol	·77	·77	·80	·80	·75	·73	·73	·73	·73
Paraffin	·93	·88	·86	·88	·88	·84	·82	·82	·82
Alcohol 90 per cent. volume, with 20 per cent. benzol	1·30	1·30	1·23	1·21	1·17	1·15	1·15	1·06	1·06
Price in £ sterling.									
Engine	93 10	140 0	180 0	207 10	183 15	220 0	385 0	435 0	632 10
Starting and reversing device	35 15	40 0	51 10	58 10	40 0	58 10	73 10	100 0	160 0
Protective cover	10 0	10 15	12 0	12 15	12 0	12 15	16 0	19 10	23 10
Total	139 5	190 15	243 10	278 15	235 15	291 5	474 10	554 10	816 0
Extra for working with paraffin or alcohol	6 13	6 13	8 0	8 13	7 7	8 0	9 7	10 0	10 0

Digitized by Google

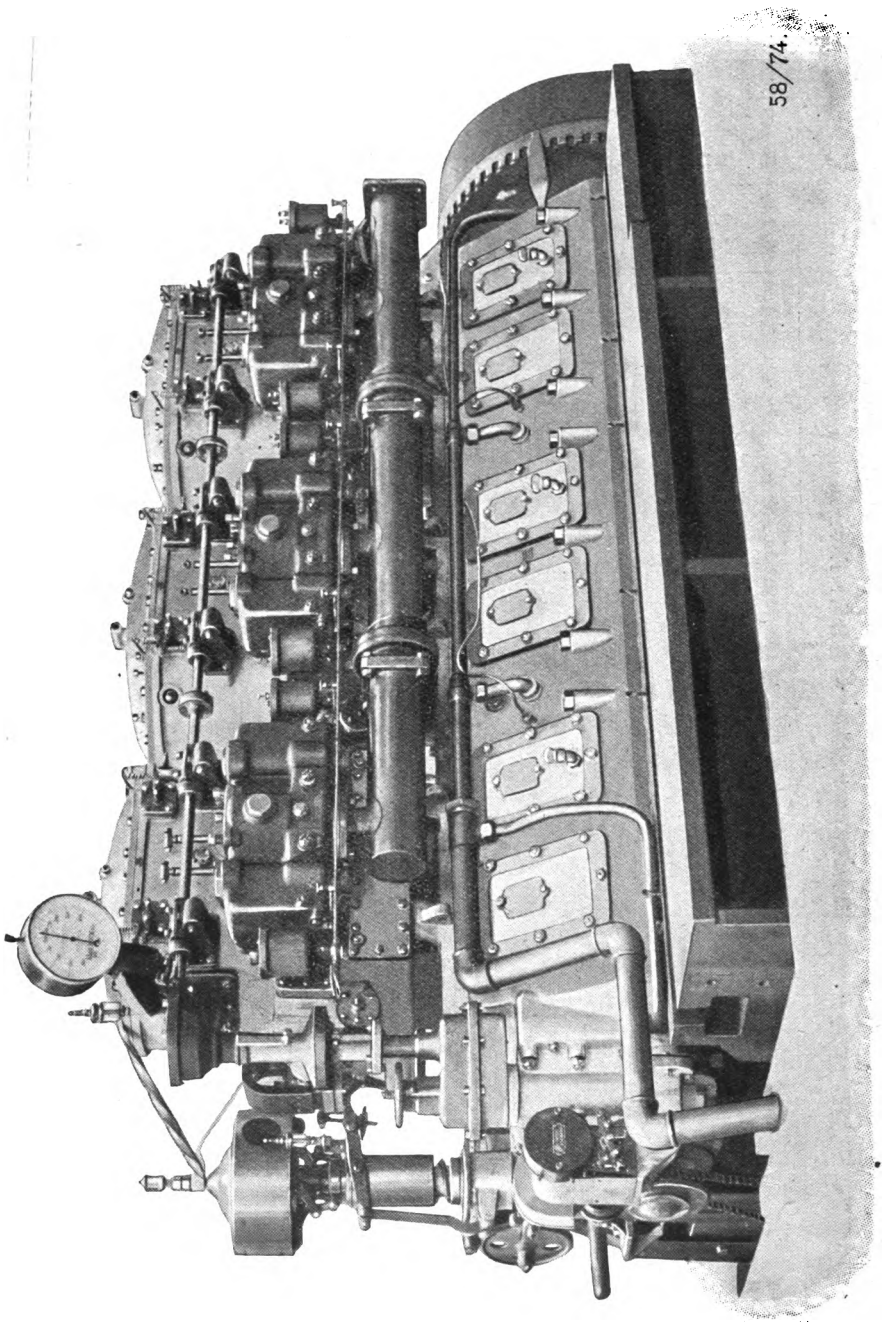

FIG. 186.—The Körting six-cylinder submarine boat engine using paraffin.

Digitized by Google

The Körting Paraffin Engine for Submarine Boats.

This is a valveless two-cycle engine. The crank chamber does not act as a mixture pump, a special pump being provided for the purpose. This is a

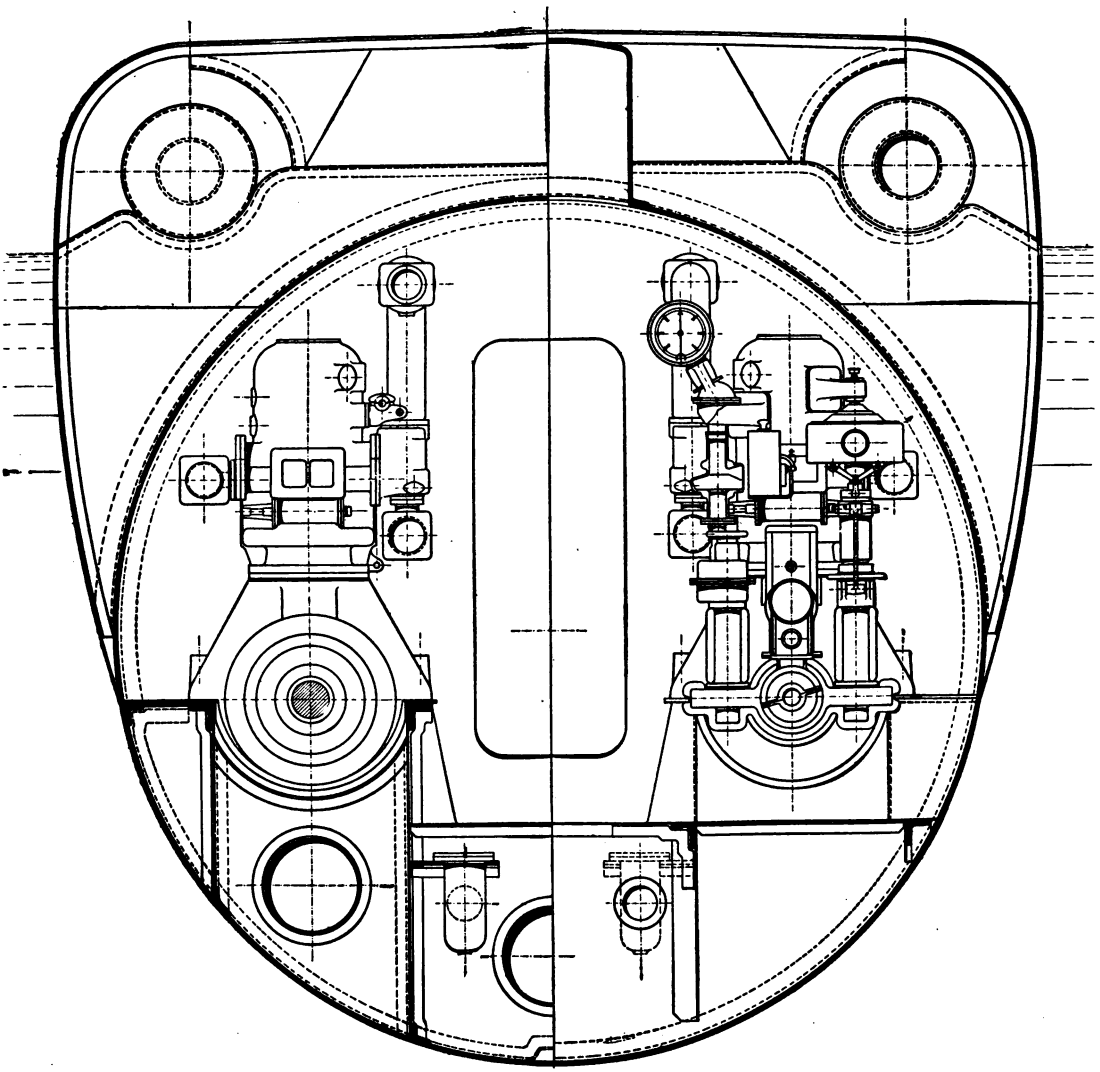

FIG. 187.—Section through the engine-room of a submarine fitted with the Körting paraffin engine.

scavenging machine. Between the introduction of a fresh charge and the exhaust of combustion gases, a charge of air is drawn in.

Digitized by Google

The engine has six cylinders water-jacketed in pairs. There is a vaporiser and one exhaust pipe for every two cylinders. The only mechanism besides the main driving gear—*i.e.* pistons, connecting rods, and shaft—is that for the ignition contact-breaker. As mentioned in the third chapter, the heating of the vaporiser and combustion chamber is done by electricity. The submarine boat being driven under water by an electric motor supplied with current from a large accumulator, there is sufficient current available for starting the engine and for heating purposes. The electric heating is so rapid that the engine can run on paraffin after four or five minutes. Petrol

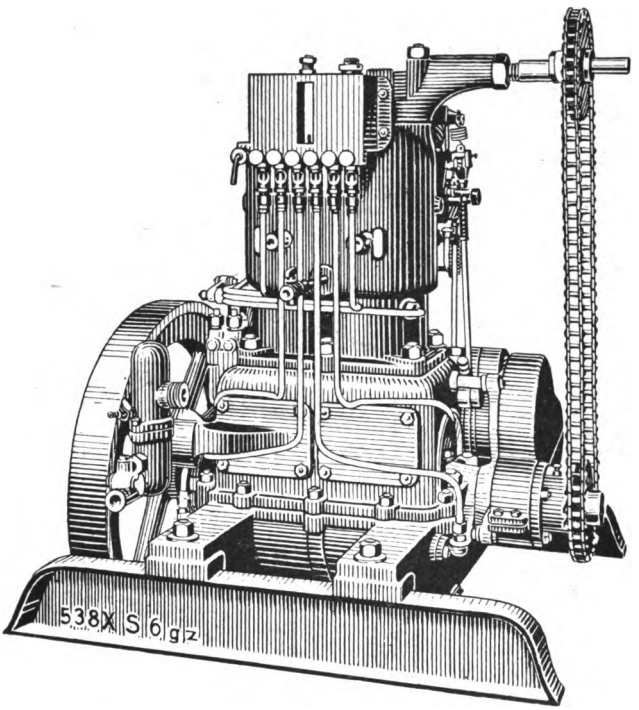

FIG. 188.—Deutz boat engine driven with paraffin.

and other dangerous liquid-fuels liable to cause explosions are not taken on board the submarine at all.

Fig. 186 is a side elevation of the engine, and fig. 187 a section through the engine-room of a submarine.

Fig. 188 illustrates a paraffin boat-engine built by the **Deutz Gasmotor-enfabrik.**

Figs. 189 to 191 illustrate a paraffin boat-engine on the **Gardner** system, as built by Bieberstein & Goedicke, Hamburg.

According to their size, the engines run at 500 to 800 revolutions per minute. They work with cut-out governing, but the exhaust valve is not

Digitized by Google

held up, the charge inlet valve, on the other hand, being kept closed. In addition to the positively controlled charge valve, these engines are fitted with a second automatic inlet valve, through which air only is drawn in. Air also enters the cylinders through this valve when the charge inlet valve is closed by the governor. Warm water drops on to the

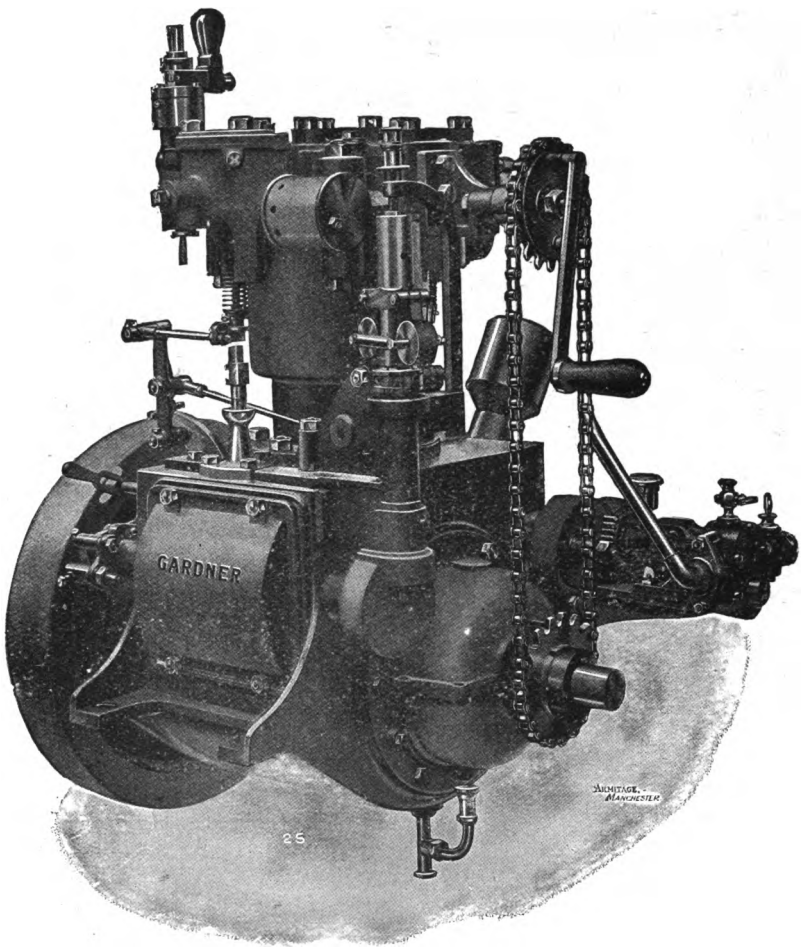

FIG. 189.—Gardner one-cylinder boat engine, using paraffin.

latter valve, and is removed in the form of steam and water-spray by the inrushing air; this lowers the internal temperature and enables a higher compression to be used.

The working of the engine is thus rendered more economical; it runs also more smoothly, and inside cleaning is but seldom required. The fuel-evaporating chamber is kept heated by a lamp.

Digitized by Google

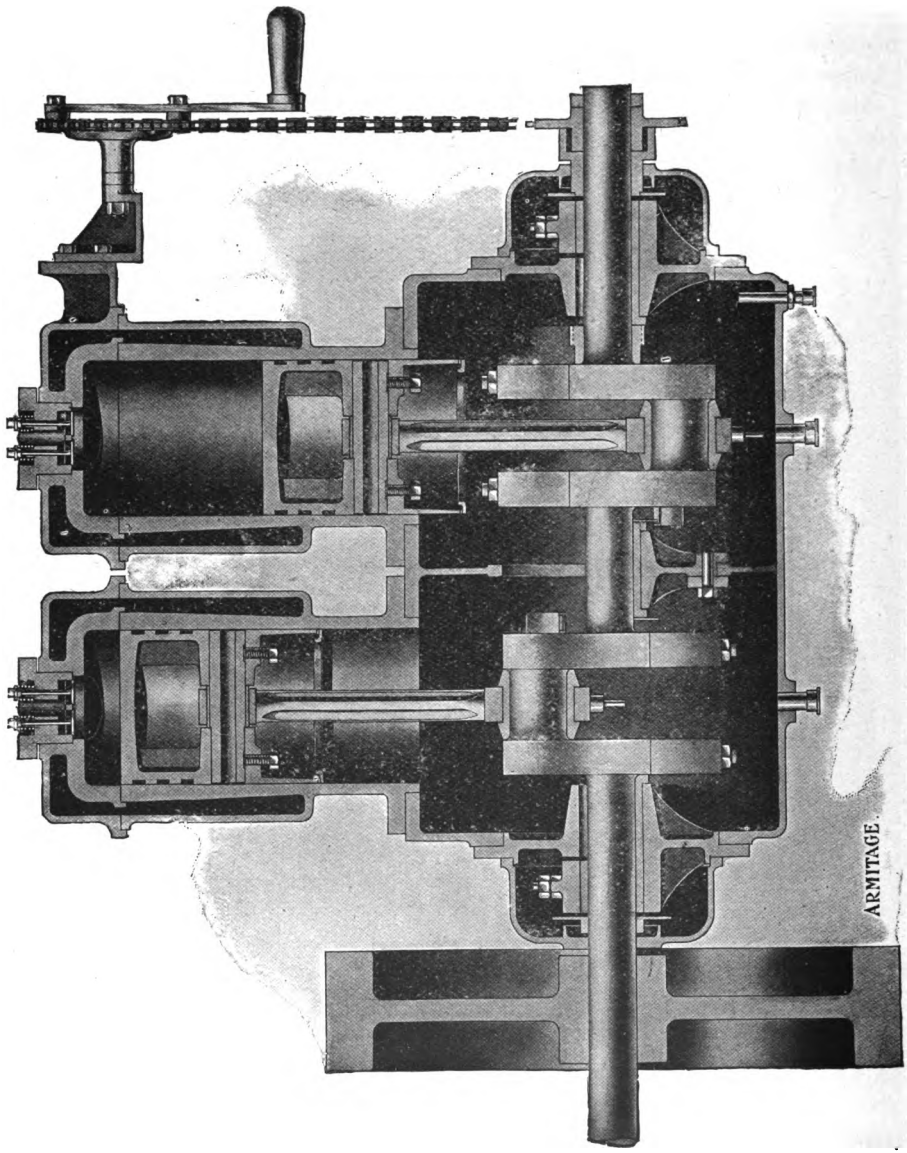

FIG. 190.—Gardner two-cylinder boat engine, using paraffin (longitudinal section).

Digitized by Google

Boat-engines built by Heinrich Kämper, Berlin-Mariendorf.

(Figs. 192 and 193.)

These engines work with petrol, alcohol, and paraffin. The fuel-tank is placed on a lower level than the carburettor, and is not under pressure. A

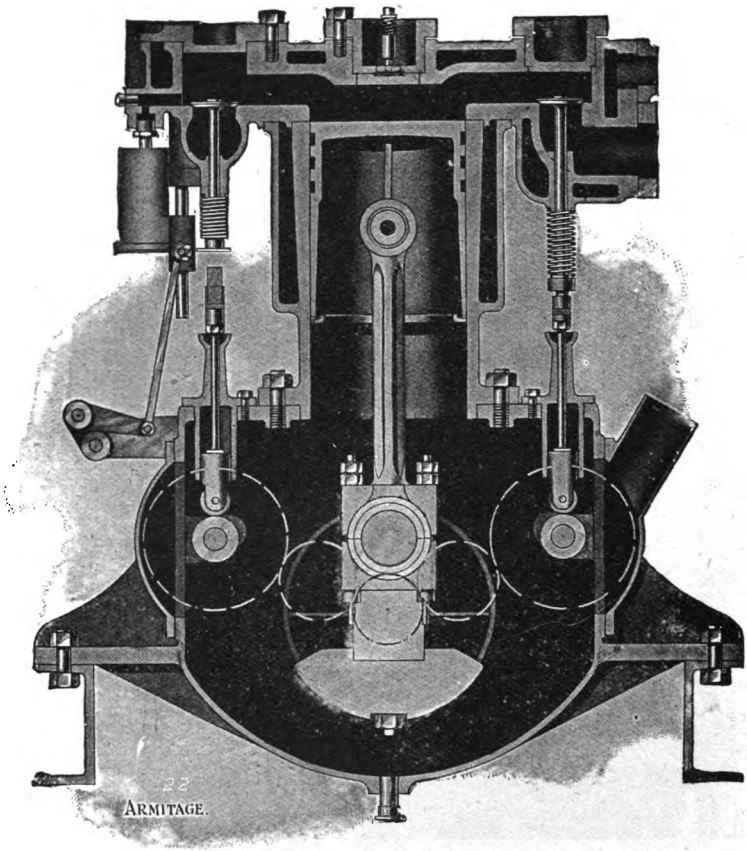

FIG. 191.—Gardner two-cylinder boat engine, using paraffin (cross-section).

pump delivers the fuel into a small overflow tank, from which that not utilised flows back to the main tank. Low-tension magneto-electric ignition is used.

In all the engines, the inlet valve is positively controlled. Both the exhaust and inlet valves are made of nickel steel, and cannot therefore become rusty. The water-jacketed spaces are provided with a cover for cleaning-out purposes. In the engines having several cylinders, the exhaust pipe is water-cooled.

Digitized by Google

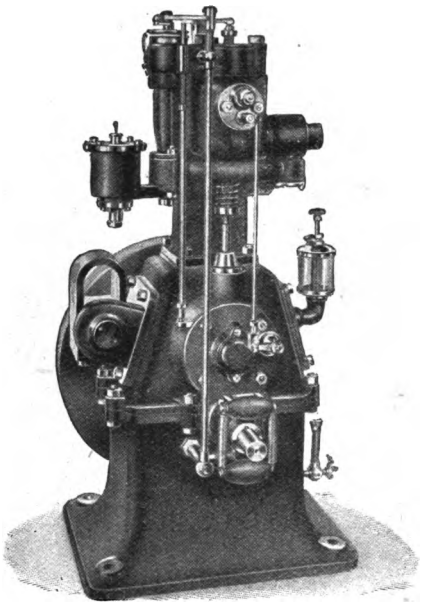

FIG. 192.—The Kämper one-cylinder boat engine.

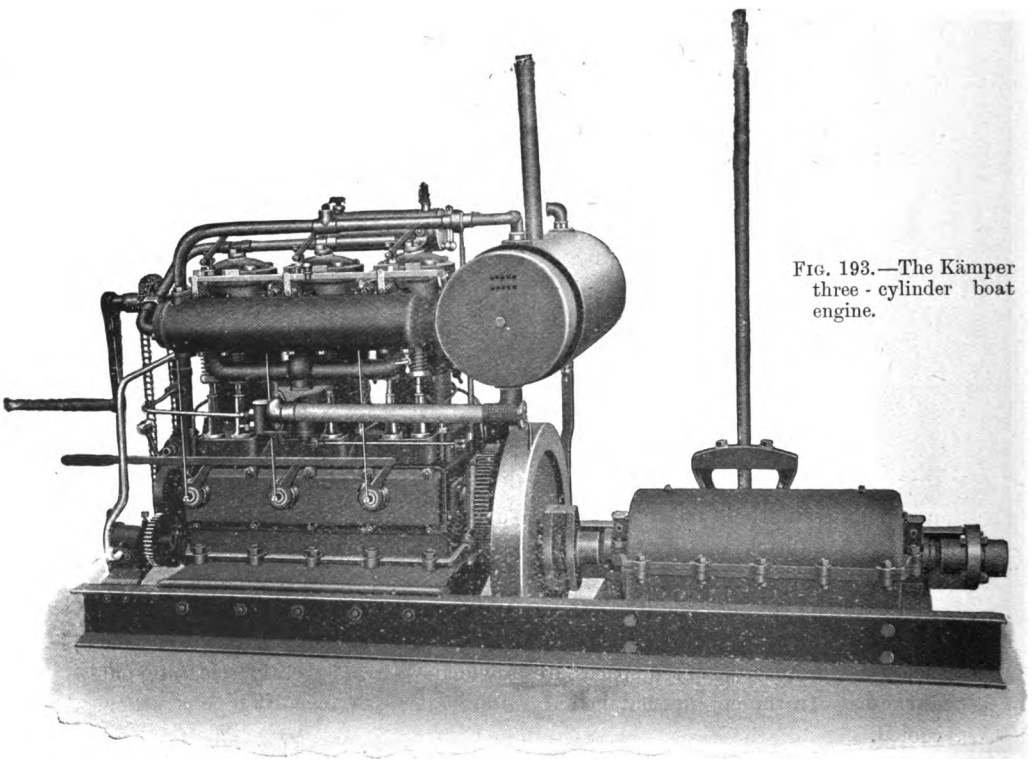

FIG. 193.—The Kämper three-cylinder boat engine.

Digitized by Google

Details of Boat and Winch-Driving Engines,

built by Heinrich Kämper, Berlin-Mariendorf.

	S	SD	SF	SDD	SG	SFF
Size	1	2	2	4	3	4
Number of cylinders	6·5	8	13	16	19	26
Brake h.-p. at normal speed	650	700	550	700	550	550
Normal speed: revs. per min.						
Price of engine, including magneto ignition, complete central lubrication, cooling pump, starting handle, fuel-tank for ten hours' running and silencer £ s.	90 0	112 10	155 0	207 10	250 0	300 0
Price of transmission gear, on frame, with lever and couplings £ s.	47 10	47 10	60 0	60 0	75 0	75 0
Price of shaft in two parts (13 ft. long) with intermediate bearing and propeller £ s.	7 10	7 10	11 0	11 0	15 0	15 0
Price of stern tube, up to 39 ins. in length £ s.	3 5	3 5	4 0	4 0	5 0	5 0
Price of protective cover £ s.	10 0	10 0	12 10	12 10	15 0	15 0
Total price of engine complete £ s.	158 5	180 15	242 10	295 0	360 0	410 0
Approximate weight in lbs.						
Engine	705	552	950	730	1210	1370
Transmission gear	210	210	310	310	375	375
Foundation frames	165	99	128	137	188	188
Shaft in two parts	57	57	77	77	99	99
Intermediate bearing	18	18	18	18	27	27
Propeller	13	13	22	22	33	33
Stern tube	22	22	24	24	27	27
Protective cover	177	150	199	199	232	253
Total	1367	1121	1728	1517	2191	2372

Boat-engines of various types, built by John I. Thornycroft & Co. Ld., Chiswick, Southampton and Basingstoke.

(These are illustrated in Figs. 194 to 197.)

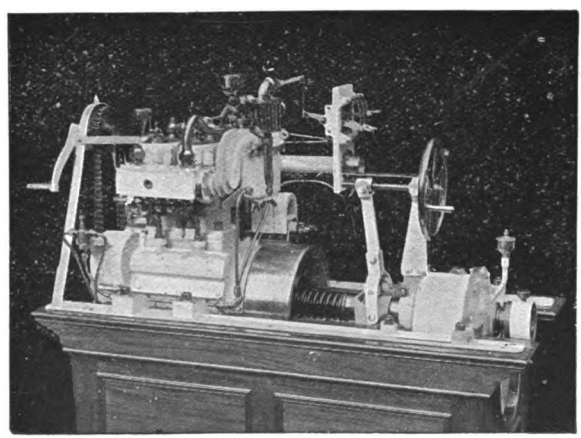

Fig. 194.—Thornycroft boat engine.

Digitized by Google

Airship Engines.

The success which has attended the manufacture of dirigible airships in

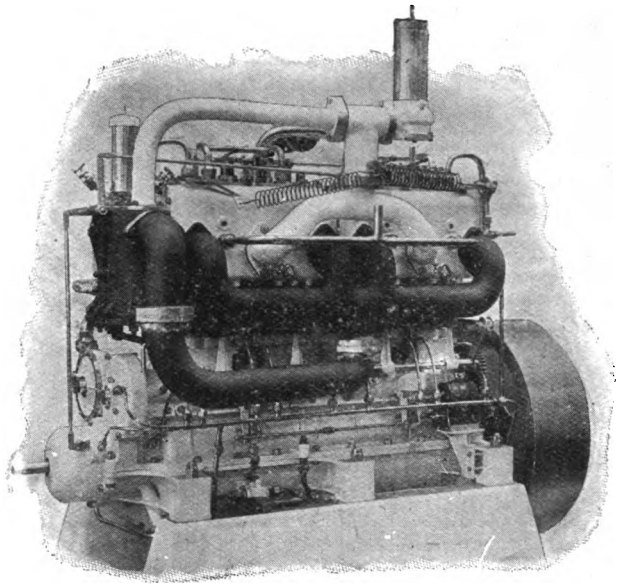

FIG. 195.—Thornycroft boat engine.

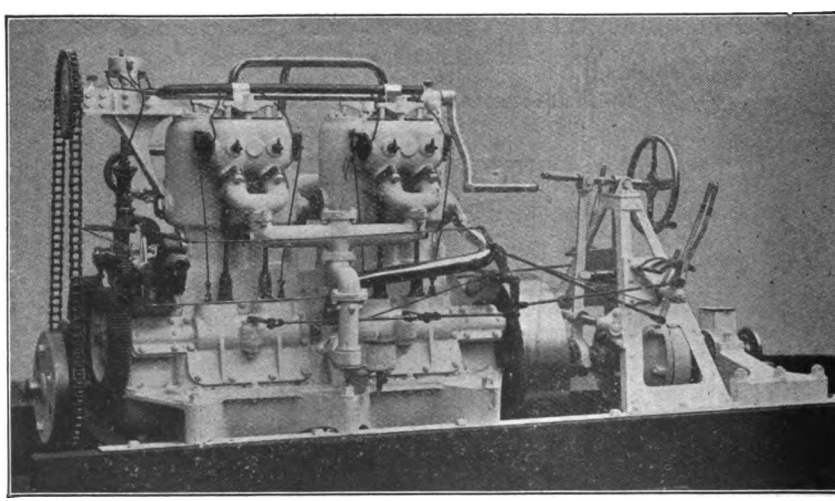

FIG. 196.—Thornycroft boat engine.

various countries is largely due to the improvements which have been made in the construction of internal combustion engines of great power combined

Digitized by Google

with lightness of weight. The power required for propelling airships and rendering them steerable with safety, can only be determined by experiments.

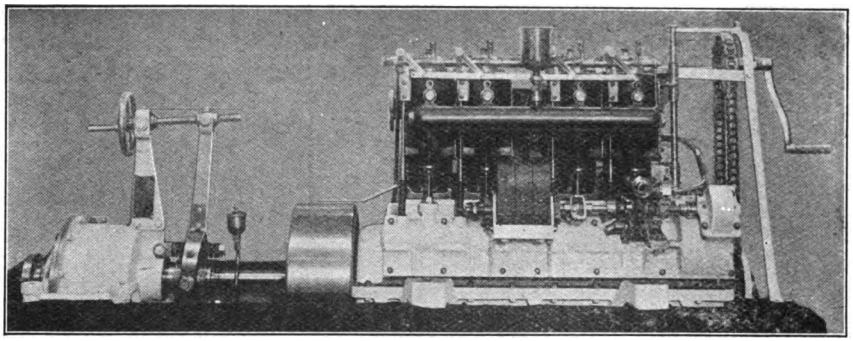

FIG. 197.—Thornycroft boat engine.

Formerly where trials were carried out with 5 or 10 h.-p., 50 to 100 h.-p. engines are now available. Count Zeppelin uses for his airship—with which, after long trials, he has obtained excellent results, attaining speeds up to thirty miles per hour—two engines of 110 h.-p. each.

As stated in the eighth chapter, when dealing with the development of cycle engines, there is still a possibility of reducing the weight of the engines,

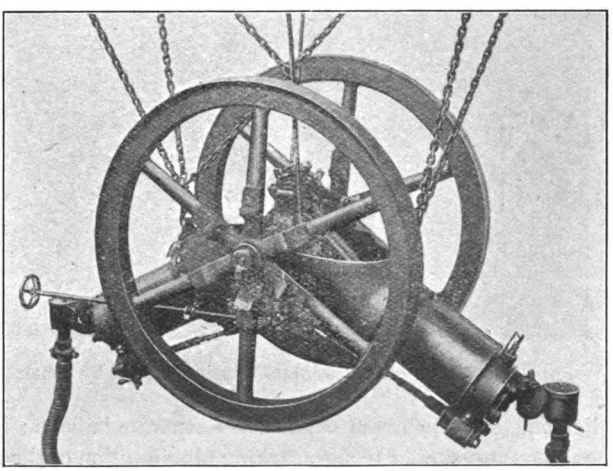

FIG. 198.—Körting airship engine of 1887.

by using new kinds of fuel and running on the two-cycle system. Owing to the great dangers which the use of petrol for airships entails, it is absolutely necessary to look for fuels which will be less likely to cause the

Digitized by Google

airship to catch fire, while being at the same time suitable for the airship engines.

But little publicity has been given to the attempts made in former times in regard to the construction of engines for airships. The firm of Gebr. Körting, Hanover, built an airship in 1887, supplied to the State Airship Department in Berlin. In order to avoid all danger of fire, this engine was sup-

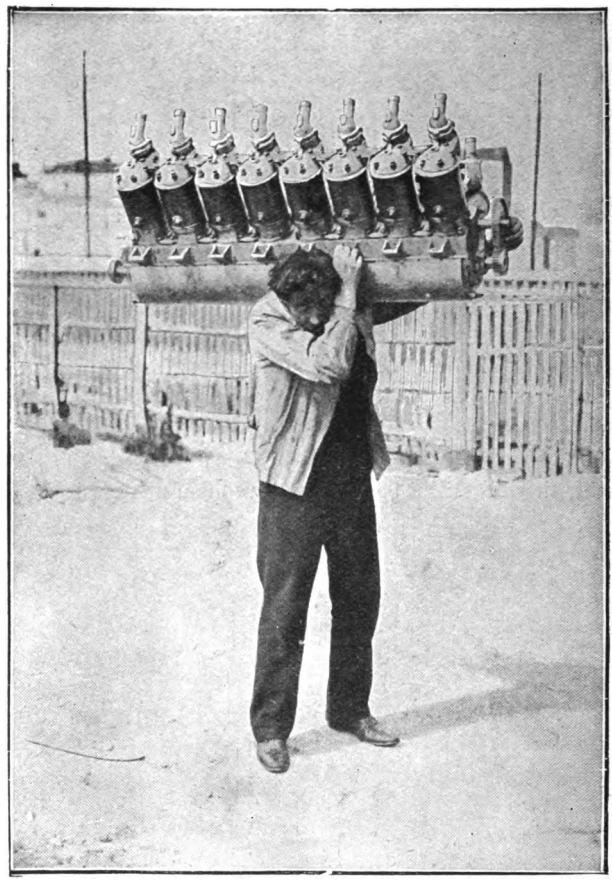

FIG. 199.—100 h.-p. "Antoinette" engine, carried by a man.

plied with lighting gas which was carried in a separate balloon; ignition was by battery on a system similar to the sparking plug ignition of the present day. Owing to the slow speed at which combustion engines then ran, and to the absence of light metals, this engine was too heavy to give good results. It is illustrated in fig. 198.

The manufacturers who have given most attention to the construction of airship engines are the Daimler Motorengesellschaft and the Société "Antoinette," Paris.

Digitized by Google

Figs. 199 and 200 show a 100 h.-p. engine built by the Société "Antoinette," which weighs only a little over 1 kg. (2·2 lbs.) per horse-power.

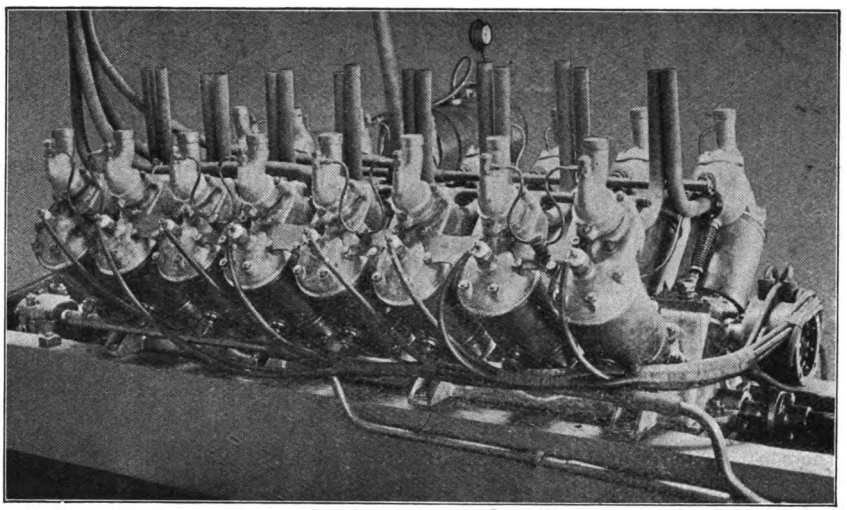

FIG. 200.—Sixteen-cylinder 100 h.-p. engine, built by the Société "Antoinette."

Digitized by Google

CHAPTER X.

ROAD AND RAIL VEHICLES, AND AIRSHIPS, DRIVEN BY INTERNAL COMBUSTION ENGINES.

As already stated, internal combustion engines cannot start automatically, and cannot be reversed by simple means; the power they develop also falls off exceedingly rapidly and at a rate out of all proportion to any reduction of speed. To these features are due several of the difficulties encountered in the construction of motor vehicles, and in consequence the drive is not direct on to the wheels, but the power is transmitted to them through gears and clutches. A steam locomotive starts running under the pressure of the steam; it commences to run slowly, but its speed will gradually increase. Such is not the case with the internal combustion engine. These engines even lack the means to enable them to commence running, and extraneous power has to be applied in order to start the fuel and air-supply and compression; it is only then, if all works well, that they can commence working. Unlike a steam engine, an internal combustion engine cannot have the full load thrown on to it at once, but must be started up and allowed to acquire a certain speed before it will develop any appreciable amount of power.

This lack of power at starting in the case of internal combustion engines is of especial disadvantage, for it is just when a vehicle is being set in motion and the inertia is being overcome, that a greater amount of power is needed than is required for maintaining an acquired speed. In the design and construction of road and rail vehicles for traction by internal combustion engines due account must be taken of these features. The engine requires a starting device, this being usually either a hand-crank or some compressed-air arrangement. The transmission between the engine and the wheel must not be of a rigid type, but should be easily removed and elastic. Both forward and backward running and different speeds must be provided for. In cases where two driving wheels are mounted on the same axle, a differential gear is required to allow of turning by driving one wheel faster than the other.

The first cycle driven by a combustion engine was that illustrated in figs. 201 and 202, built by Daimler; this motor cycle was brought out in the early 'eighties.

Daimler followed this up by bringing out, in 1886, the first motor-car, illustrated in figs. 203 and 204. In this, the engine was mounted in the space

Digitized by Google

between the two axles; power was transmitted by means of two belts and an intermediate shaft and gears. Starting was effected by means of a friction coupling on the engine shaft.

At the same time as Daimler had succeeded with his motor-car, C. Benz, of Mannheim, was also successful; he brought out, also in 1886, a car which is shown in figs. 205 and 206. The engine flywheel, in this car, was horizontal, and power was transmitted by bevel gear and pulley to an intermediate belt pulley, and from this to the driving wheels through chains. The car had only one steering wheel. This first Benz car is still fit for service.

FIG. 201.—The first Daimler motor cycle.

The Benz works then built in 1888 a new type of car, in which, however, they retained practically the same mechanical devices; they exhibited this at the time in Munich, and it was the first road-car driven by a petrol engine ever shown at an exhibition.

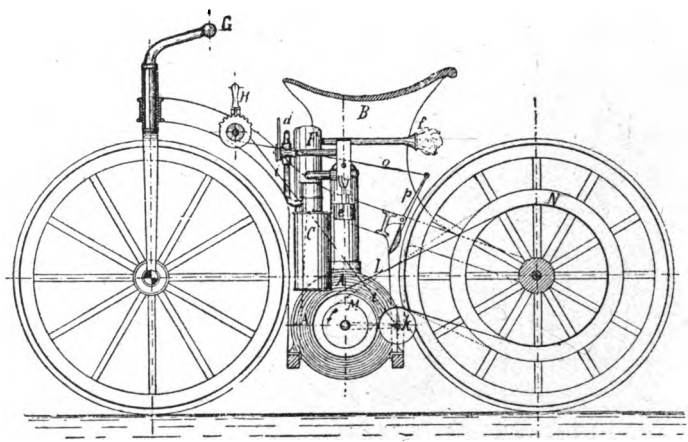

FIG. 202.—The first Daimler motor cycle (side elevation).

A, Crank chamber and working cylinder; B, Saddle; C, Carburettor; F, Silencer; , Exhaust pipe; M, N, Belt pulleys; K, Belt tightening jockey pulley; H, Hand lever for belt tightening jockey pulley; *o*, *p*, Brake which works by slackening the belt; G, Handle-bar.

This car travelled at a speed of 16 kms. (about 10 miles) an hour, and could travel on gradients of 6 in 100 (one in 16·6).

Since those earlier days, both the Benz works and the Daimler-Motoren-

Digitized by Google

gesellschaft have been untiring in their efforts to further the development of automobile construction, and have met with very good success. After their first cars, the Benz works brought out a type of car which was found to be most serviceable and durable, several of which are even now quite fit for service.

FIG. 203.—The first Daimler car, 1886.

The Benz car built in 1891 is shown in figs. 207 to 209. As will be seen, the belt drive is retained; steering wheels pivoted on the axle were used for the first time in this automobile.

Recent Automobiles.

It does not fall within the scope of this publication to describe in detail the various types of chassis and gear; these will only be considered so far as is necessary to convey a clear general understanding of the subject.

From the opening remarks of the present chapter dealing with the

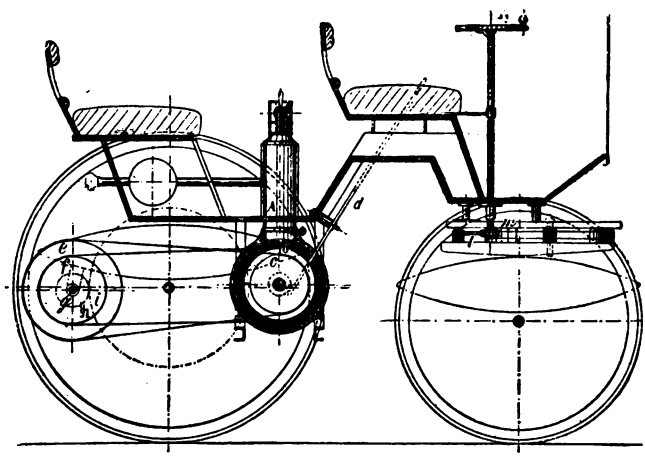

FIG. 204.—The first Daimler car, 1886 (side elevation).

A, Engine; *b*, *c*, Belt pulleys on the motor shaft; *e*, *f*, Belt pulleys on the intermediate shaft; *g*, Intermediate shaft; *k*, Steering wheel; *m*, *l*, Pivoted steering frame.

characteristic features of the internal combustion engines, it will be evident that the construction of really serviceable chassis and gear, likely to give

Digitized by Google

thorough satisfaction in service, is no easy matter. The modern types of motor-car construction are the result of constant labour and the outlay of vast sums of money during the last ten years.

No lengthy consideration of the development of power-driven vehicles is necessary for it to be recognised that the vibrations and shocks on the

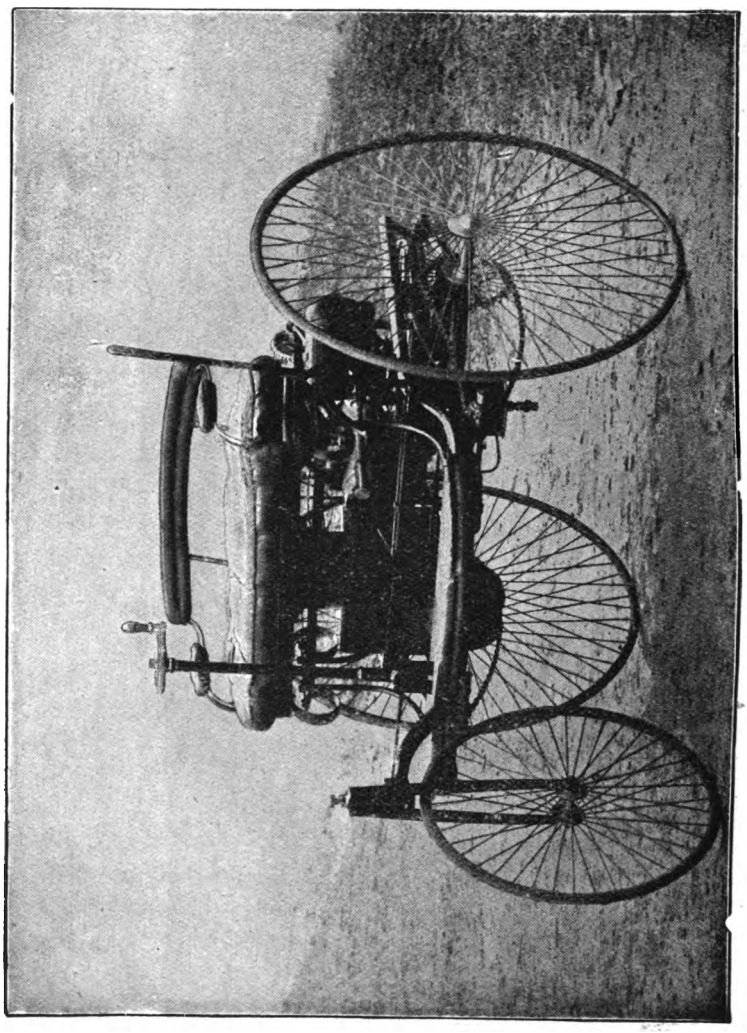

Fig. 205.—The first Benz motor-car, 1886.

automobile chassis, arising from iron-tyred wheels, even at the slow speeds that were practicable in the earlier days, must have had a very detrimental effect on all the parts of the automobile frame and of the engine itself. The spring suspensions until then used for passenger vehicles were not in the least suitable for power-propelled cars. The numerous shocks due to the small and great unevennesses of the road surface could only be properly

Digitized by Google

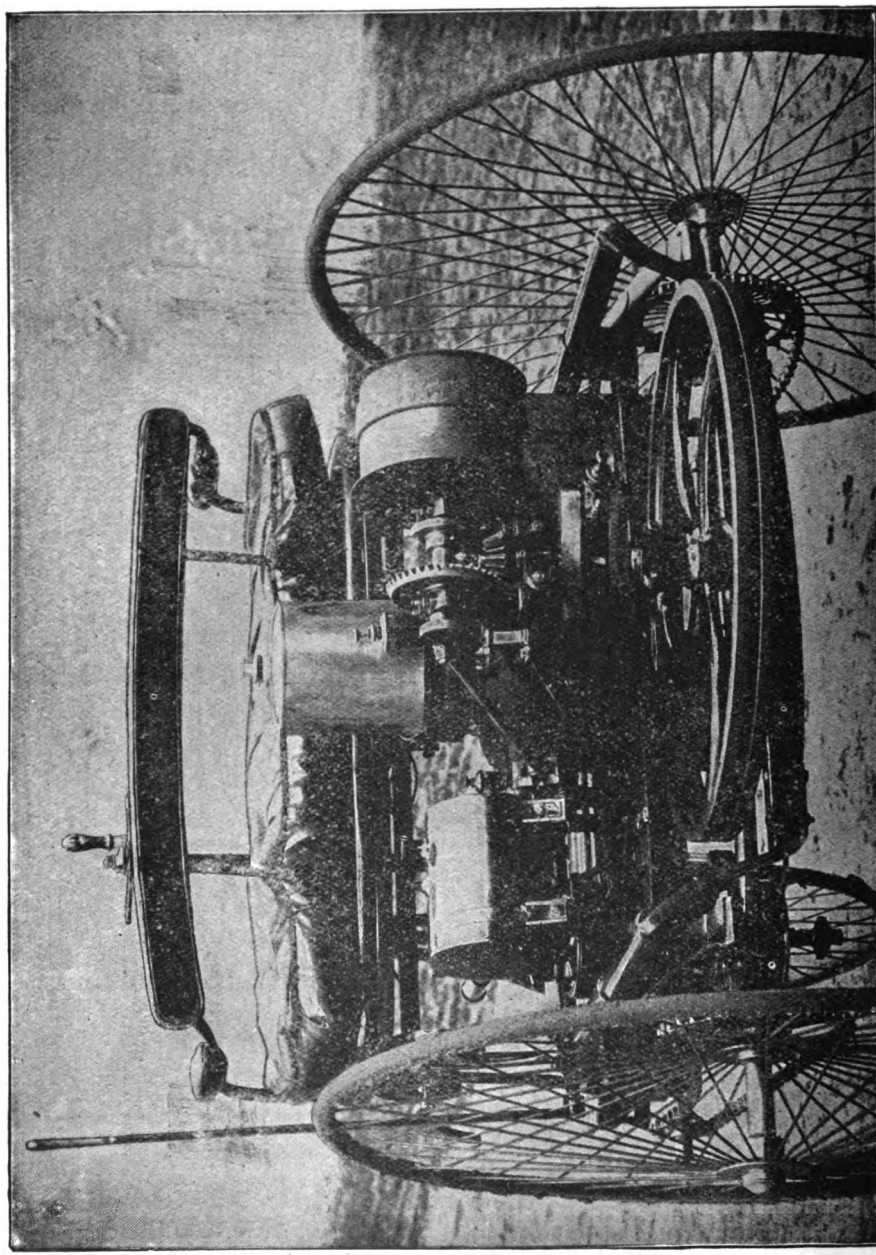

FIG. 206.—The first Benz motor-car, 1886 (rear view).

Digitized by Google

counteracted by the use on the wheels of tyres of great elasticity; the shock must be neutralised at the very point of origin. In spite of all the attempts made in this direction, nothing has so far been found more suitable than the india-rubber pneumatic tube such as is used on bicycles. It is only by the use of pneumatic tyres that travelling at the high speeds now possible is really feasible, and the desire for fast travelling is so great that people are willing to pay more for tyre expenses than for the power for propelling the car. The cost of rubber exceeds that of the fuel.

The need for satisfactory steering arrangements increased with the higher

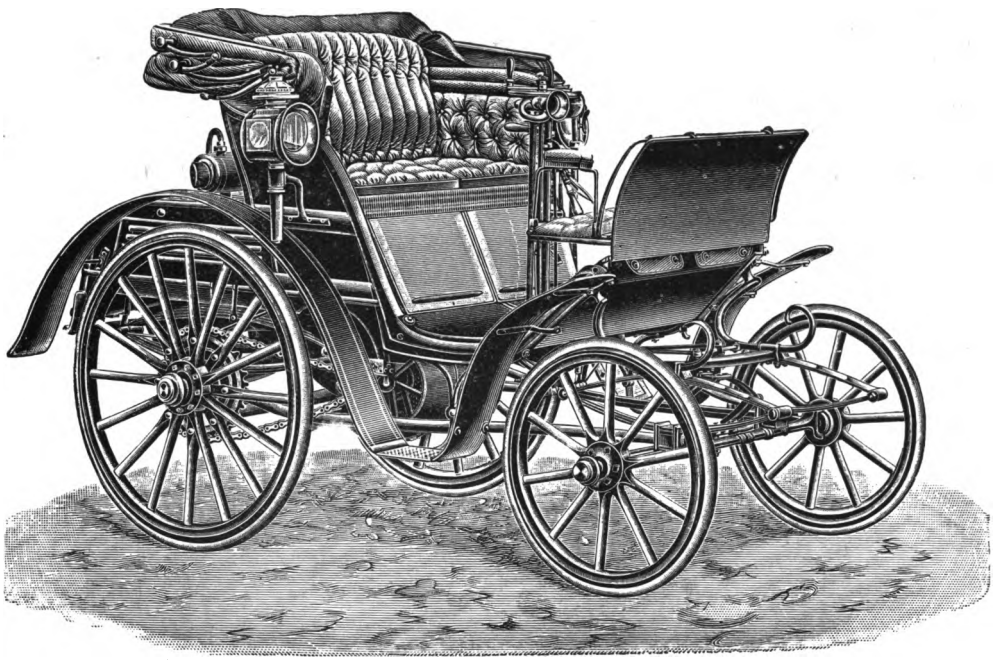

FIG. 207.—View of Benz automobile of 1891, seating three or four persons. 5 h.-p. engine; weight, 15 cwts. 1 qr.; cost, £225.

speeds. The old steering device, in which the front axle and wheels turned on a centre, required a considerable amount of power and was slow in action. It was therefore necessary to modify this in some way, and this was done by pivoting the front wheels at the ends of the axle, acting on them directly and swivelling them in the direction of travel. The necessity of working the back wheels with some compensating gear, the so-called differential gear, has already been alluded to.

For transmitting the power to the driving wheels, for changing the speed and for backward travelling, toothed gears running in oil are used.

As it is not advisable to throw the pinions in and out of gear, and to change speed while they are being driven by the engine, the clutch between

Digitized by Google

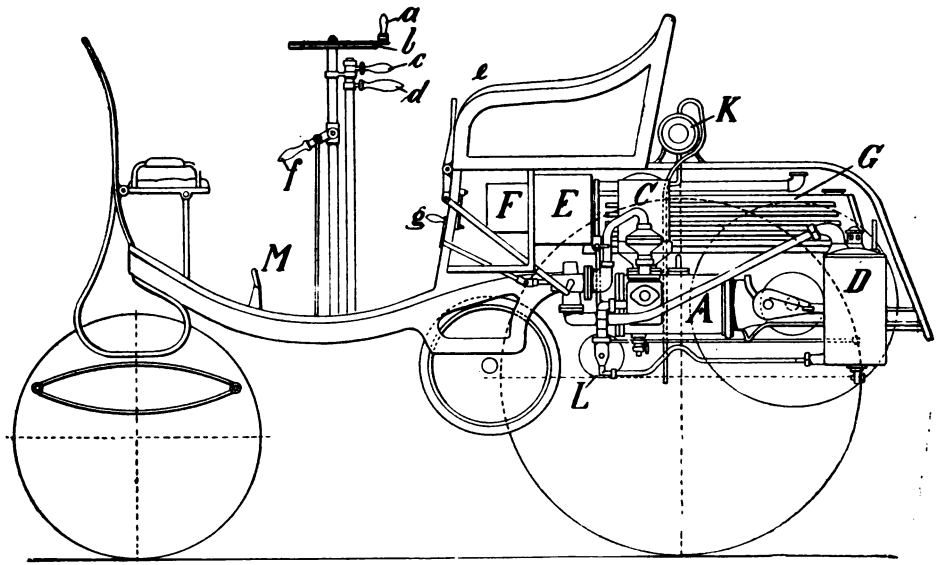

FIG. 208.—Benz automobile of 1891 (side elevation).

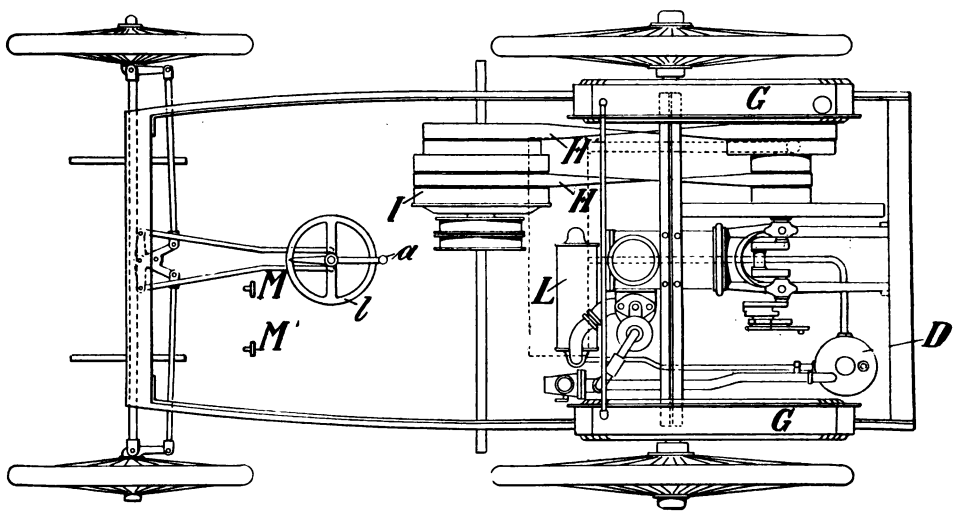

FIG. 209.—Benz automobile of 1891 (plan).

A, Working cylinder; D, Carburettor; E, Petrol tank; F, Induction sparking coil; L, Silencer; G G, Cooling water tank; C, K, Expansion chamber for cooling water; H, Belt for slow speed; H′, Belt for fast speed; *a* and *b*, Steering wheel and handle; *c*, *d*, Belt shifting device; *e*, Hand control of throttle valve; M, M′, Brake lever pedals.

Digitized by Google

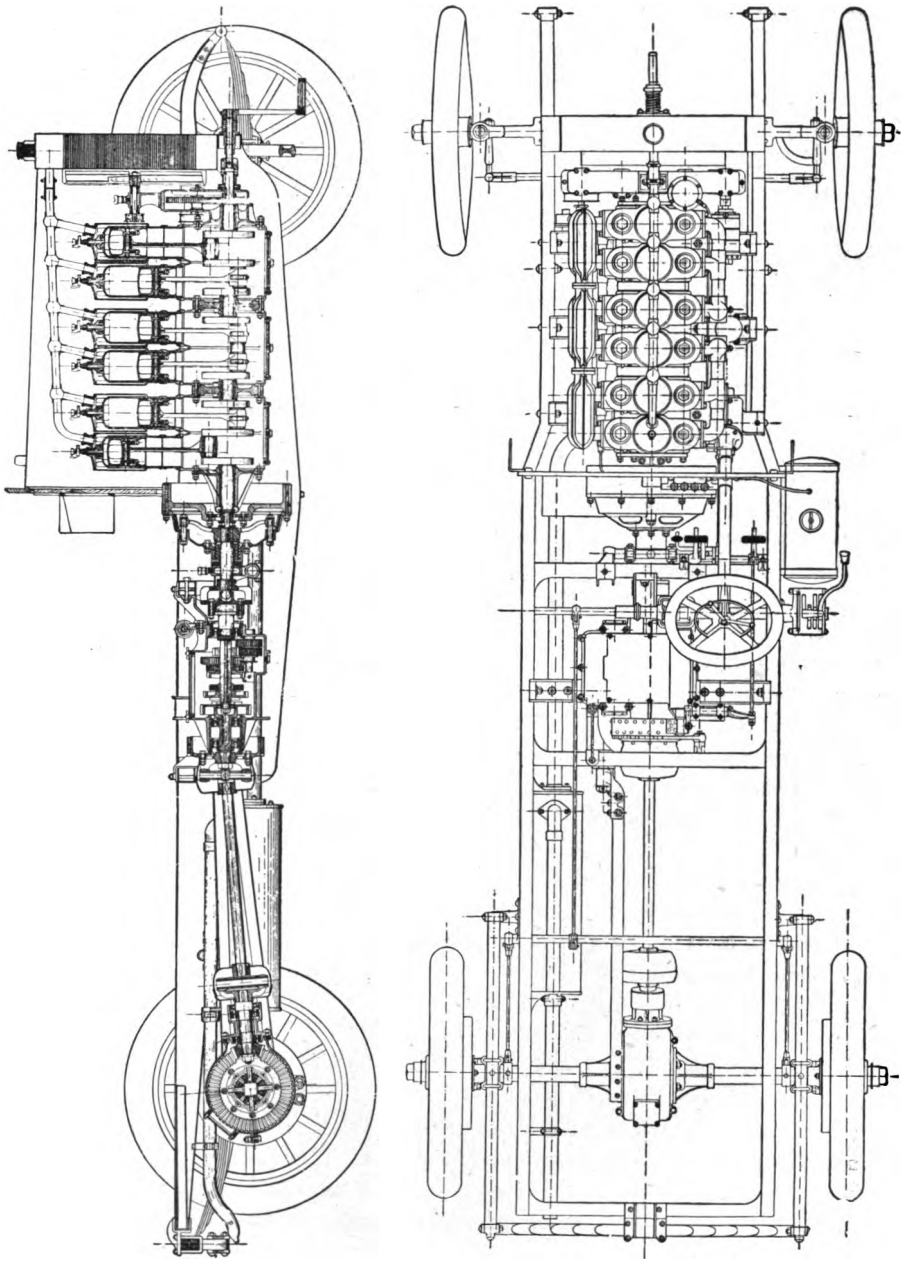

FIGS. 210 and 211.—Chassis of the six-cylinder automobile "Hexe" type, built by Achenbach & Co., Hamburg.

Digitized by Google

the latter and the gearing is in frequent use and has to be made specially light and easy of operation.

The suspension of the chassis on the axles has to be such that no detrimental effect whatever on the transmission gear will be caused by the frequent relative movement of these parts. This is provided for by the use of slightly slack chains for heavy cars, and of a Cardan shaft in lighter vehicles.

Little attention was paid at first to the cooling of the working cylinders of automobiles. The first power-propelled cars were equipped with a "ribbed cooling device" of the type used in stationary engines. The weight of the larger quantities of cooling water at first carried, especially in the case of the larger engines, was very considerable, and endeavours to reduce it led to the manufacture of flat-tube radiators which have now been in general use for the last five or six years. With these radiators, the water is circulated through the cylinder jacket, and, by means of a small rotary pump, through a large number of flat tubes having a large cooling surface, by which means a great cooling effect is obtained with a very small quantity of water.

Figs. 210 and 211 illustrate the chassis and gear of an automobile of the "Hexe type" built by Achenbach & Co., Hamburg; these drawings show the manner in which the various parts forming a modern car are arranged. The radiator is placed directly over the front axle; behind this is the fan which increases the cooling effect. Then comes the six-cylinder engine, the clutch, and the gear, the latter running in oil. To this is coupled the inclined Cardan shaft, and lastly on the rear driving axle the differential gear. The automobile complete is illustrated in view, fig. 212.

In figs. 213 to 217 are shown the chassis, gear, and different types of "Mercédès Simplex" automobiles built by the Daimler-Motorengesellschaft; and also various other types of cars.

Figs. 218 to 220 illustrate the chassis and gear, and various cars of the "Bayard" type, built by A. Clément, Paris.

In figs. 221 and 223 are shown the chassis, gear, and carriage body of a four-cylinder automobile built by the Nürnberger Motorfahrzeugfabrik "Union," Ltd. The gear of this automobile does not take the form of toothed wheel transmission, but is of the friction type. By shifting the friction wheel, any speed can be obtained up to 70 kms. (43·5 miles) per hour, as well as running on the reverse. There are no shocks on starting, nor in changing over from one speed to another. With friction gear, gradients up to 30 per cent. (1 in 3·3) can be taken easily.

Figs. 224 and 225 illustrate a three-wheeled motor-car built for two or three persons by the Maschinenfabrik "Cyklon," Rummelsburg, near Berlin. The drive is arranged on to the front axle, a flat belt and a chain being used; the front axle is also the steering axle. The engine is fitted to the fork, and turns with the steering.

As the front axle is the driving axle, the risk of skidding at the rear is abolished. The engine is of 3·5 h.-p., and speeds up to 35 kms. (21·7 miles) per hour can be attained.

Digitized by Google

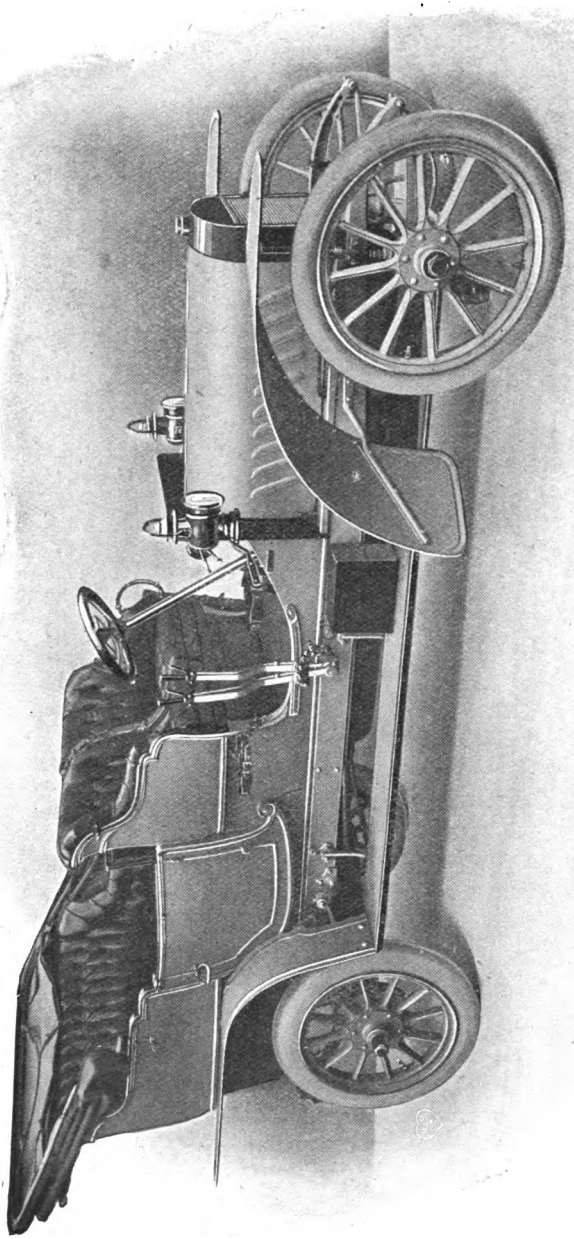

FIG. 212.—View of the six-cylinder "Hexe" automobile 35/40 h.-p. Price, £870.

Digitized by Google

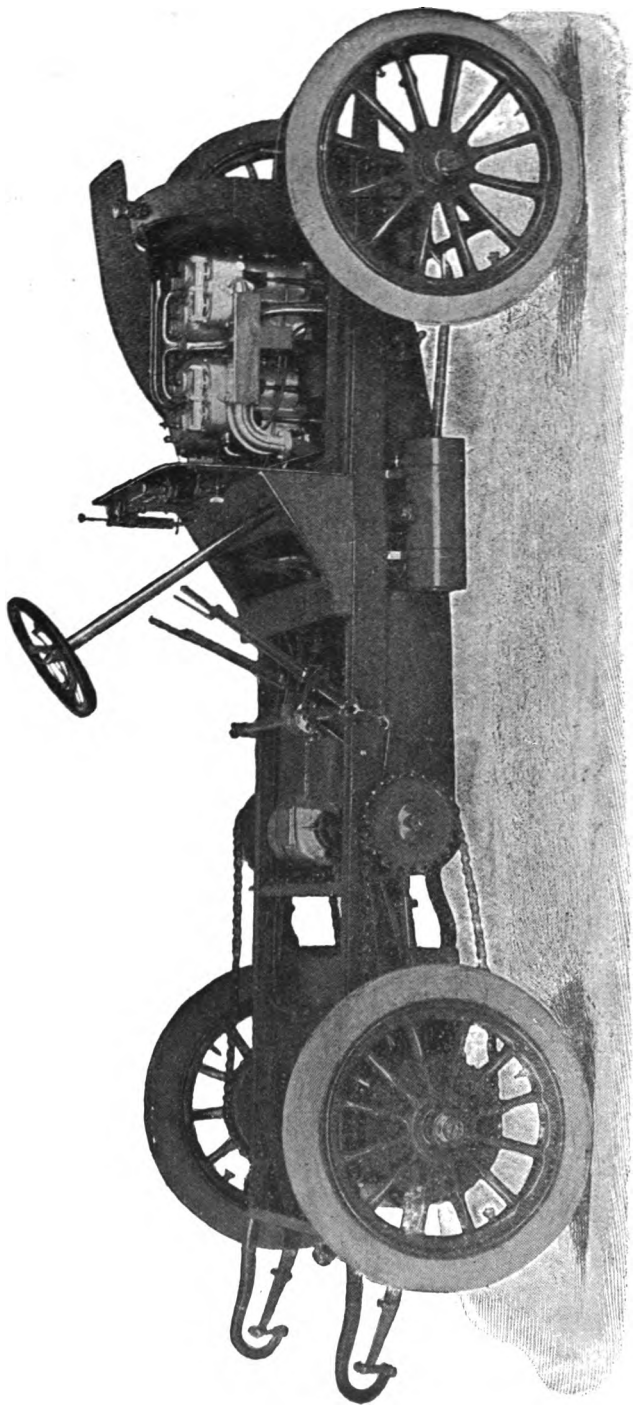

FIG. 213.—Chassis and gear of the Daimler-Motorengesellschaft, Untertürkheim, near Stuttgart.

Digitized by Google

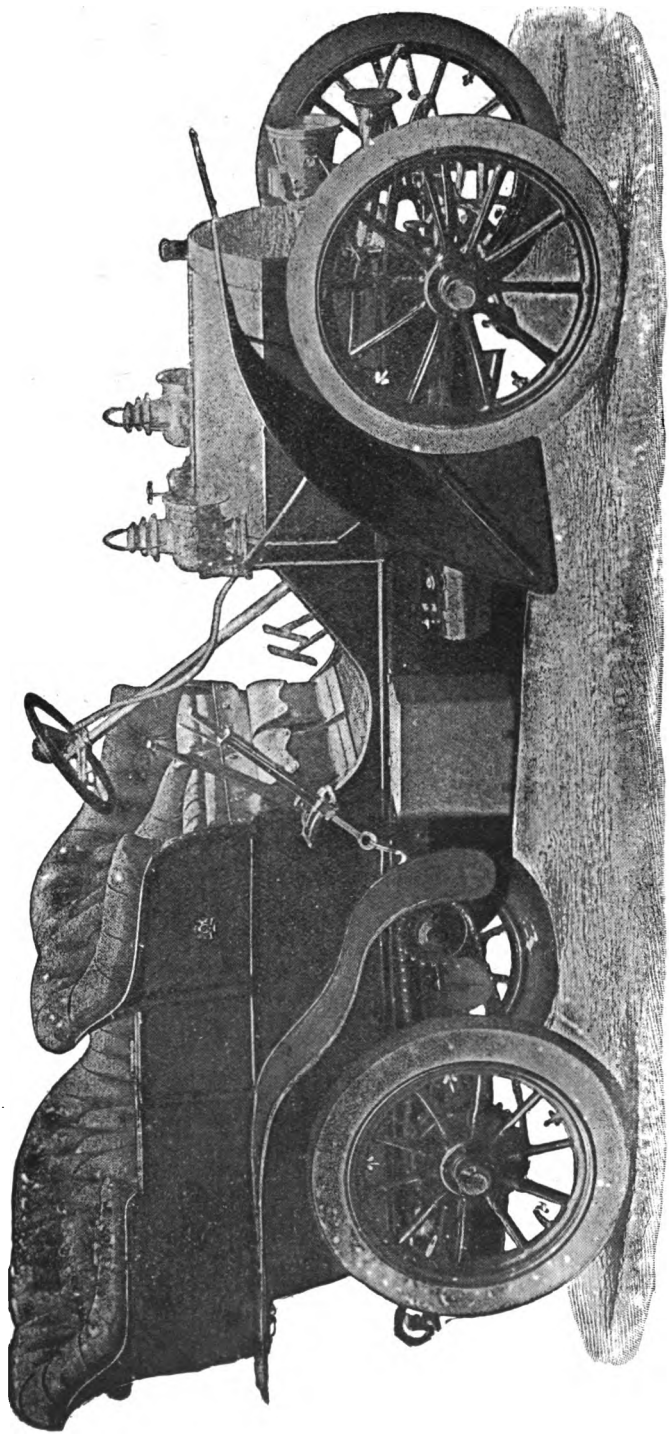

FIG. 214.—View of an 18 h.-p. motor car "Mercédès Simplex," built by the Daimler-Motorengesellschaft (supplied to H.M. King Edward).

Digitized by Google

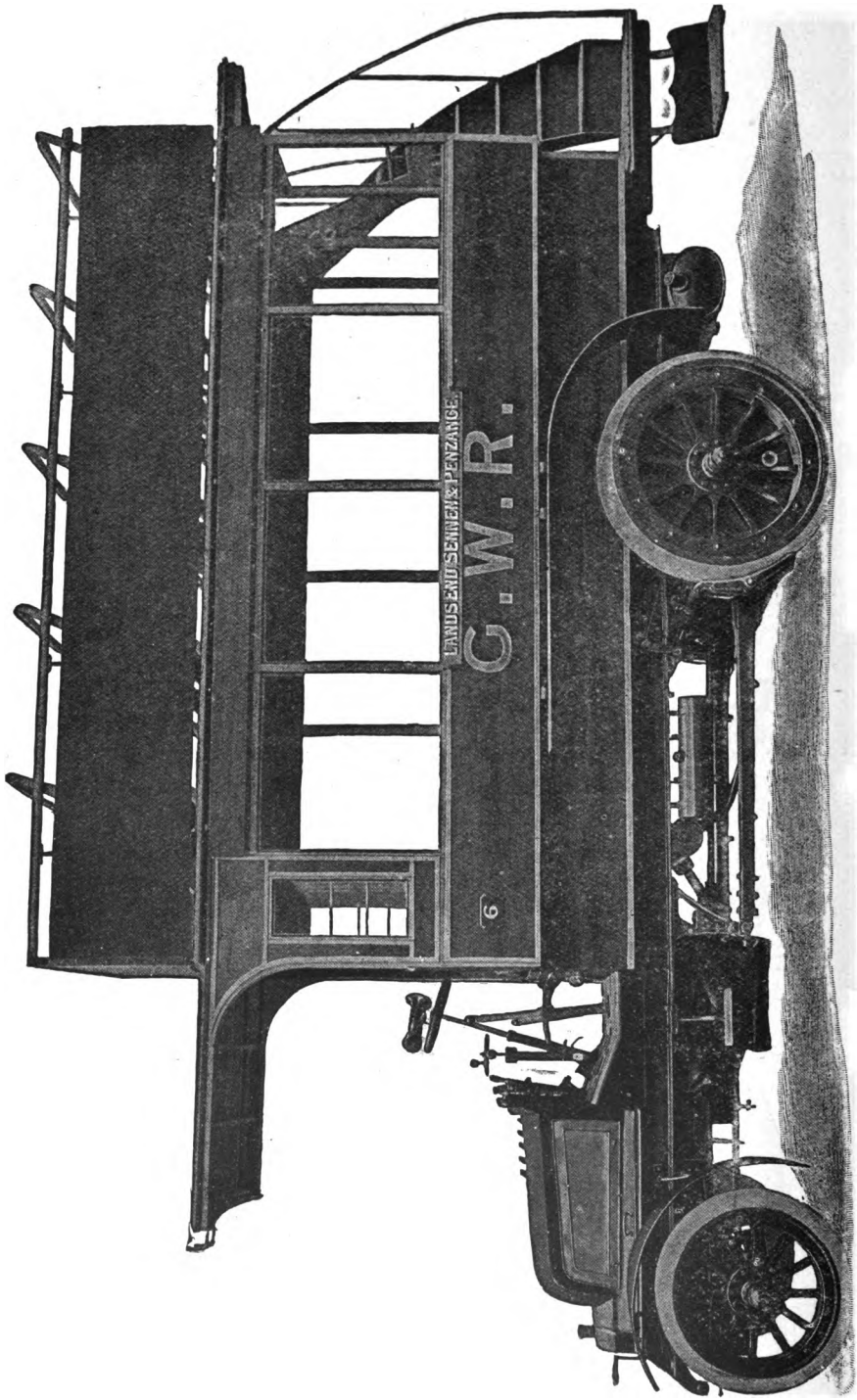

FIG. 215.—12 h.-p. motor omnibus, built by the Daimler-Motorengesellschaft.

Digitized by Google

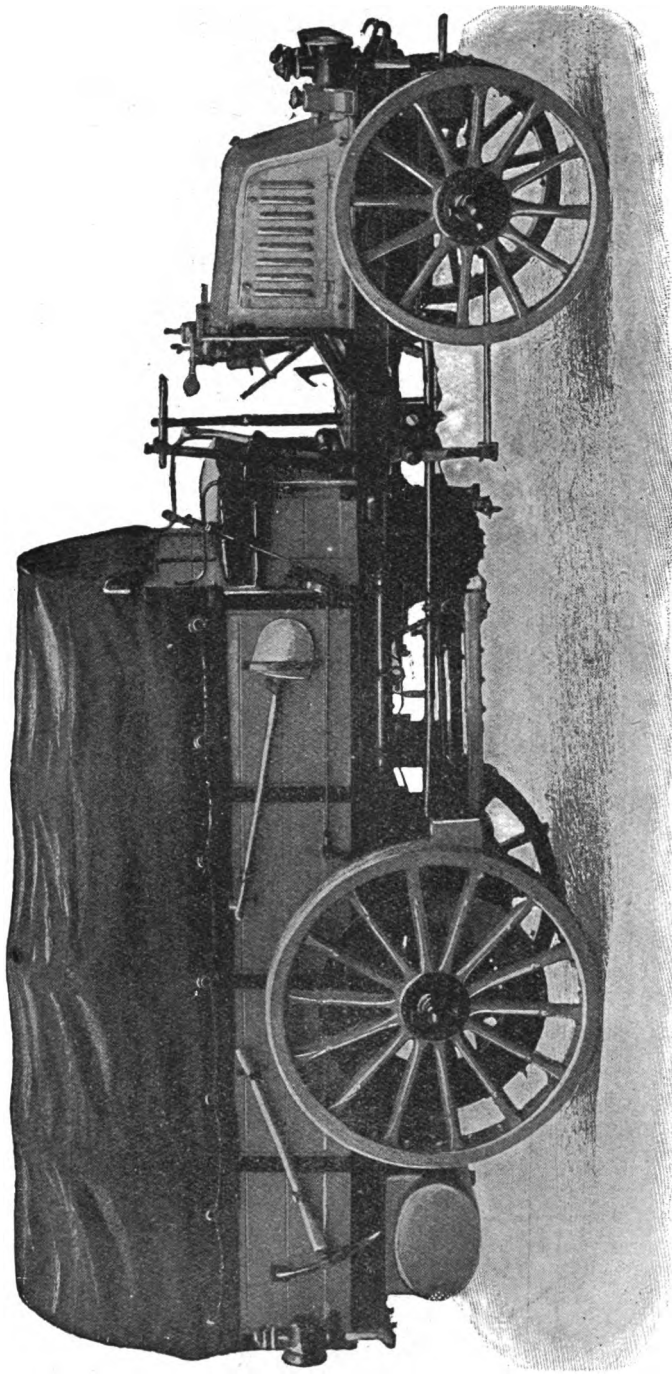

FIG. 216.—10 h.-p. military transport car, built by the Daimler-Motorengesellschaft. To carry 2·5 tons.

Digitized by Google

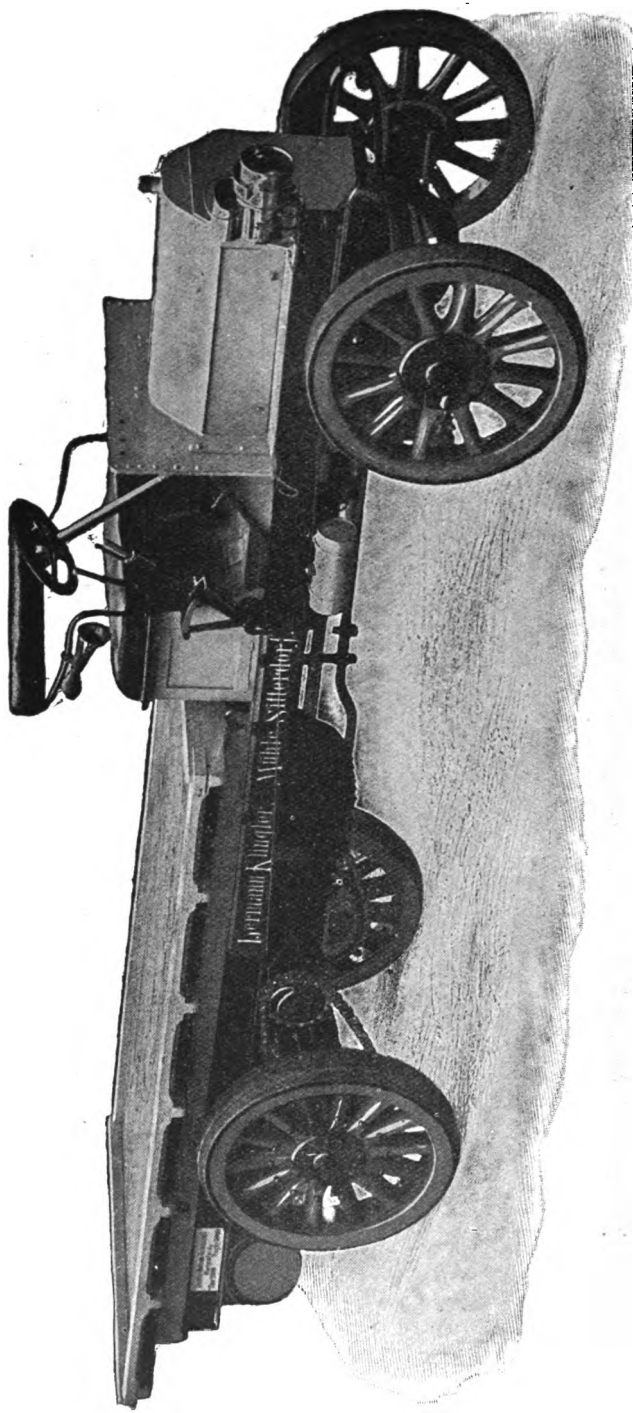

FIG. 217.—16 h.-p. lorry, built by the Daimler-Motorengesellschaft. To carry 5 tons.

Digitized by Google

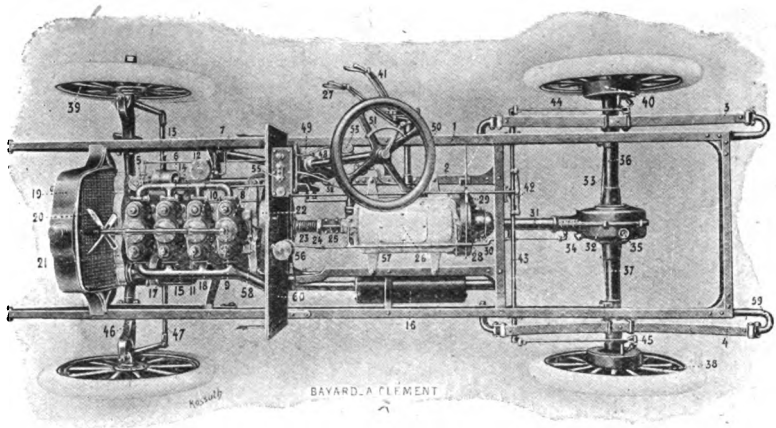

FIG. 218.—Chassis of a "Bayard" 14/18 h.-p. automobile.

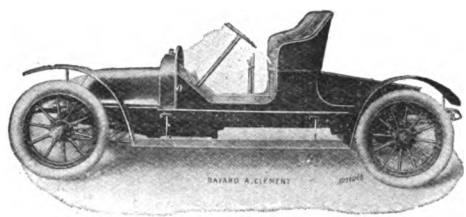

FIG. 219.—View of a 10/14 h.-p. "Bayard" automobile.

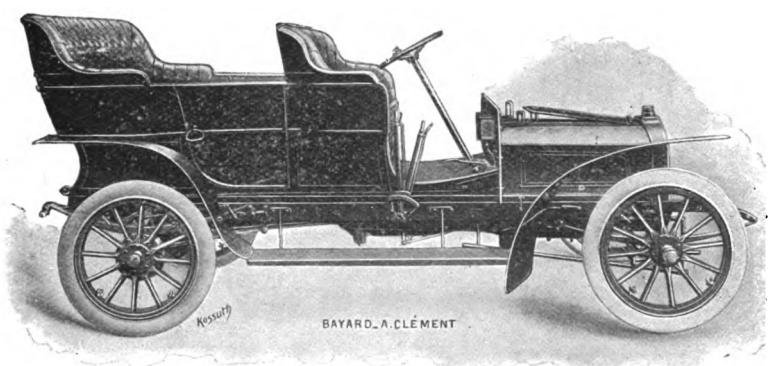

FIG. 220.—View of a 14/18 h.-p. "Bayard" automobile.

Digitized by Google

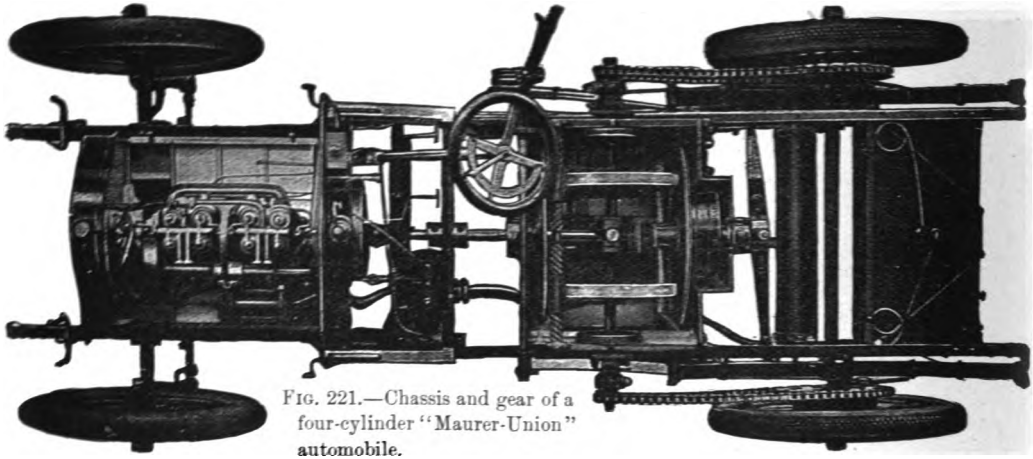

FIG. 221.—Chassis and gear of a four-cylinder "Maurer-Union" automobile.

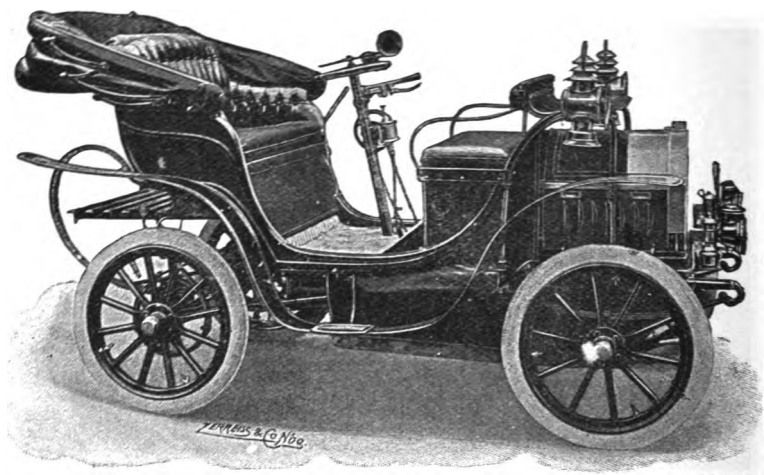

FIG. 222.—6 to 8 h.-p. "Maurer-Union" automobile for doctors' use. Price, £215 to £230.

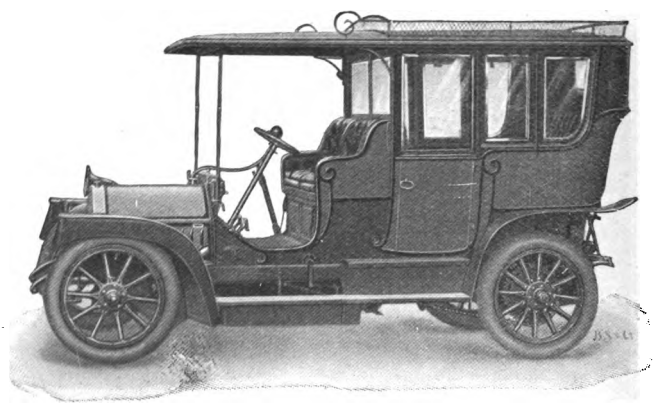

FIG. 223.—12 to 22 h.-p. four-cylinder "Maurer-Union" automobile. Price, £750.

Digitized by Google

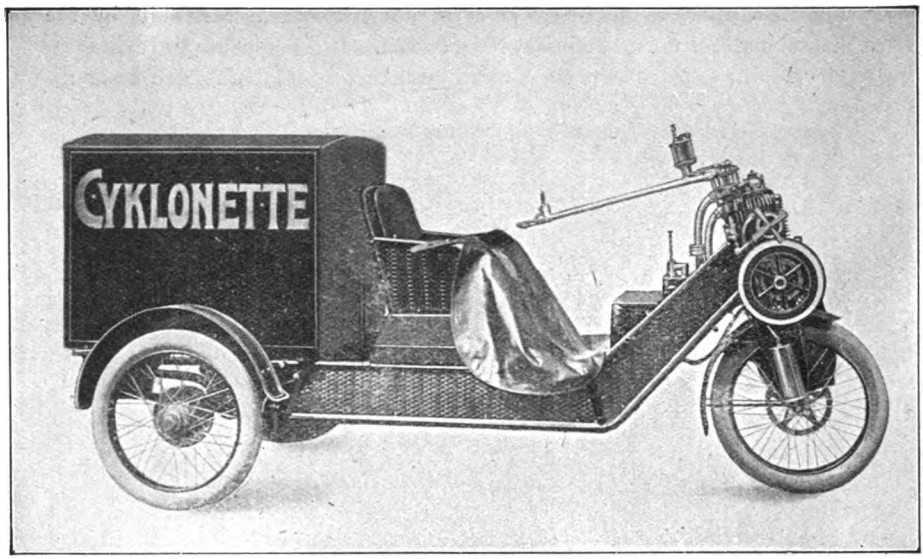

FIG. 224.—"Cyklonette" delivery car, built by the Maschinenfabrik "Cyklon," Rummelsburg, near Berlin.

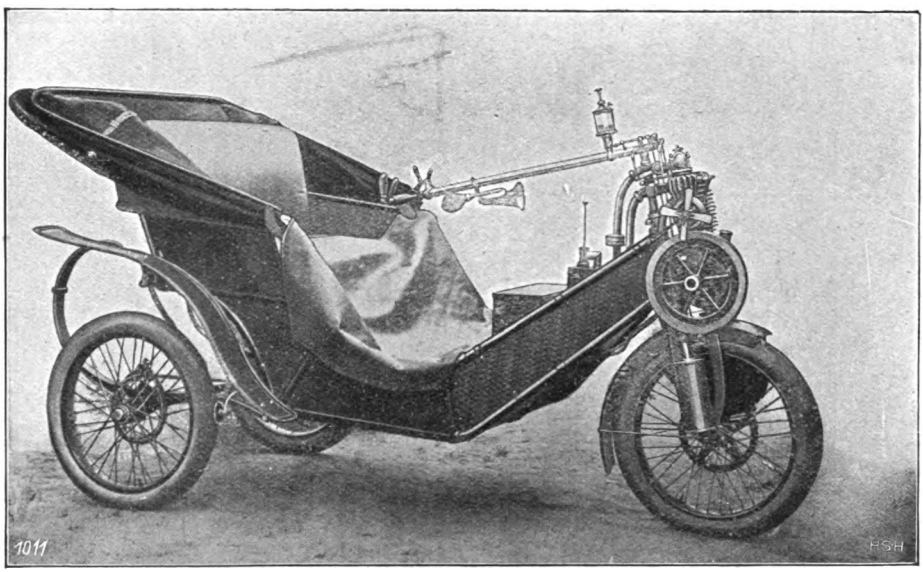

FIG. 225.—"Cyklonette" with hood, seating two or three persons. Price, £137, 10s. Length, 8 ft. 9 in.; width, 4 ft. 8 in.; height, 4 ft. 7 in. Distance between rear wheels at tread, 4 ft. 2 in.; weight, 5 cwt.

Digitized by Google

Fig. 226 shows a motor-tricycle with detachable side-seat, built by the Neckarsulmer Fahrradwerke-A.-G., Neckarsulm. The engine has two cylinders, and develops 5 h.-p. The cycle is fitted with back-pedal brake, double trans-

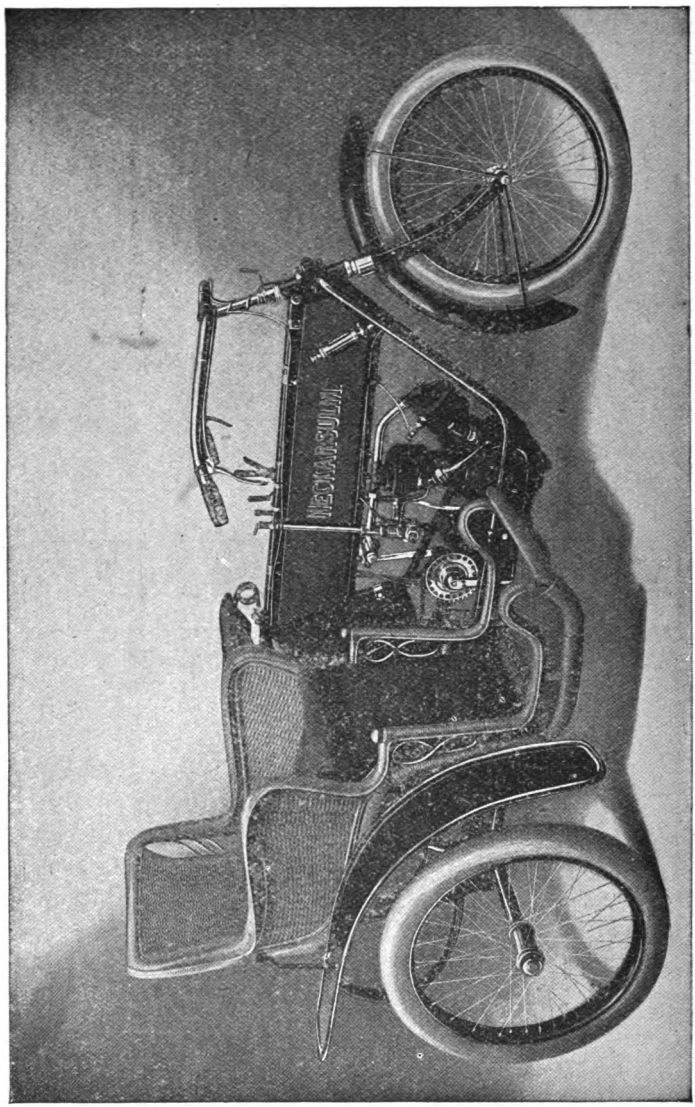

Fig. 226.—Neckarsulmer motor tricycle with detachable side seat.

mission, and free wheel. Fans can be fitted also to increase cooling of the cylinder.

A 2½ h.-p. motor-cycle by the Wanderer-Fahrradwerke, Schönau, near Chemnitz, is illustrated in fig. 227. The back-wheel can run free, and is provided with back-pedalling brake.

Digitized by Google

Fig. 228 illustrates the motor-cycle built by H. & A. Dufaux & Co., Geneva, Switzerland, of the "Motosacoche" type. The engine is so designed that it may be fitted to an ordinary bicycle frame. The 1½ h.-p. engine costs £19, 15s.

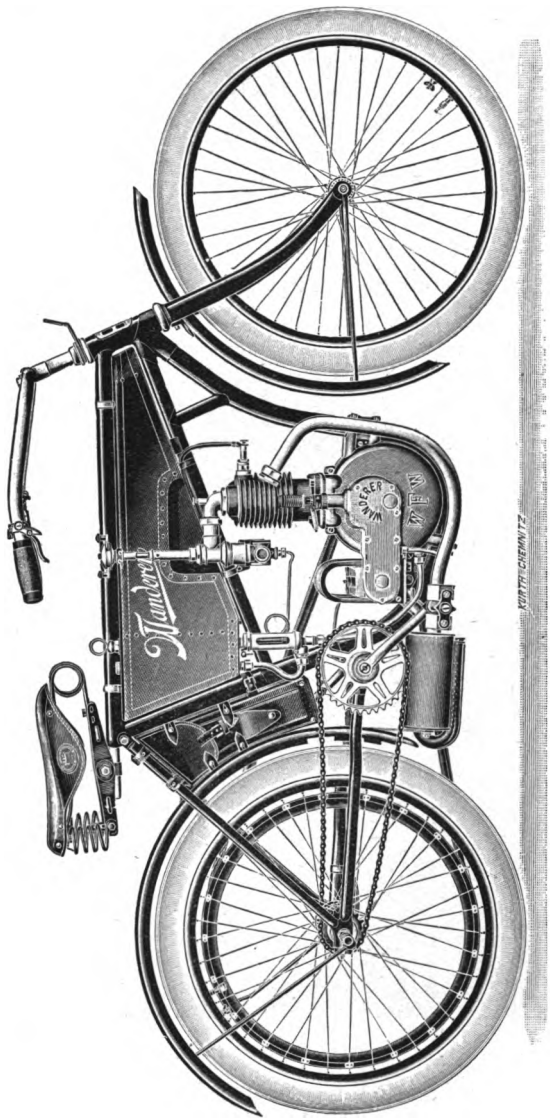

FIG. 227.—2½ h.-p. motor cycle of the Wanderer-Fahrradwerke. Price, £42.

Illustrated in figs. 229 and 230 is the tractor already referred to, built by Lieutenant Troost for his undertaking in South-West Africa. Owing to the tracks being largely through sand in that part of the world, the ordinary power wagons cannot be used, and Lieutenant Troost has met the case by

Digitized by Google

providing his tractor with a strong wire rope winch. In the more difficult parts the car travels forward alone, and the wire rope is paid out completely.

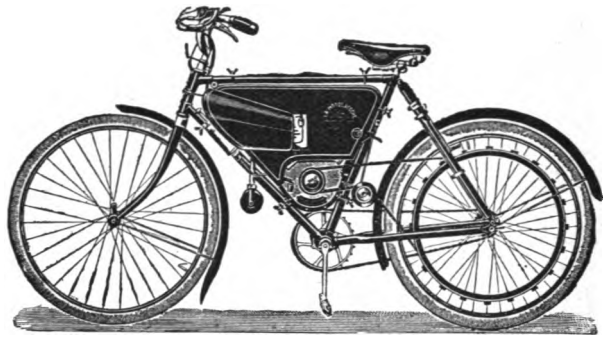

FIG. 228.—Bicycle fitted with a 1¼ h.-p. "Motosacoche" engine.

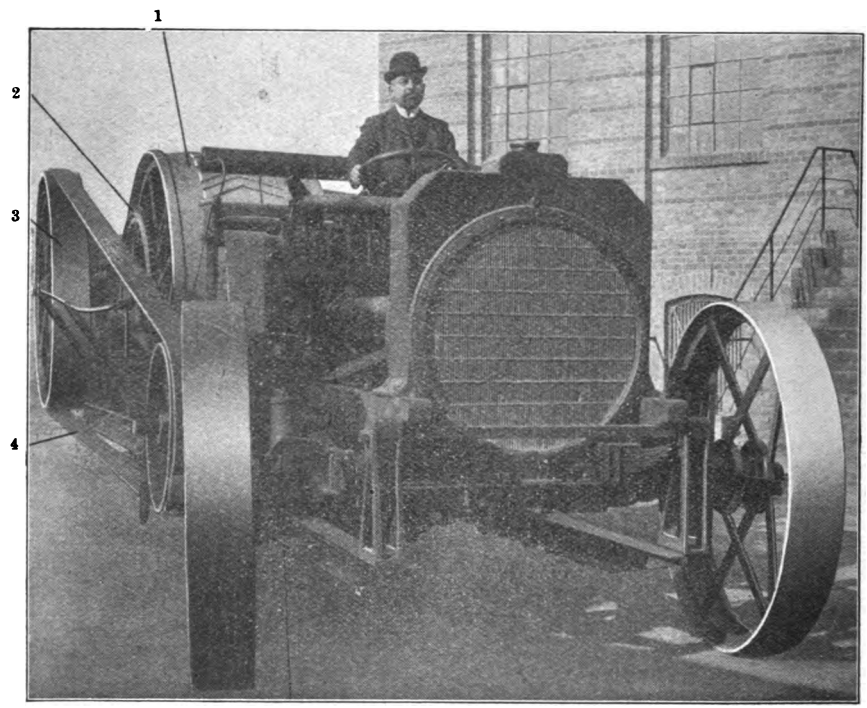

FIG. 229.—Troost tractor.

1, Driving wheel; 2, Chain wheel; 3, Driving belt pulley; 4, Driving belt; 5, Steering.

The car is then scotched, and it hauls the trailers by winding the rope back on to the drum.

The design of this car differs entirely from the ordinary power wagons. Extreme simplicity and safe working are the main features of this thoroughly

Digitized by Google

practical wagon. All the repairs that are likely to be required can be effected by the appliances with which it is provided. In order to prevent skidding, it is arranged something like a giant tri-car. The wide rear wheel, 7 ft. 7 in. in diameter, acts as the driver; steering is performed with the front wheels, which are fitted with swivelling axles.

Power is supplied by the 70 h.-p. Swiderski engine above referred to, transmitted to the toothed wheel gearing at the back by a belt. The large driving wheel is driven from the toothed wheel gearing by a chain. The wire rope drum is fixed to the driving wheel; when it is necessary to use the drum,

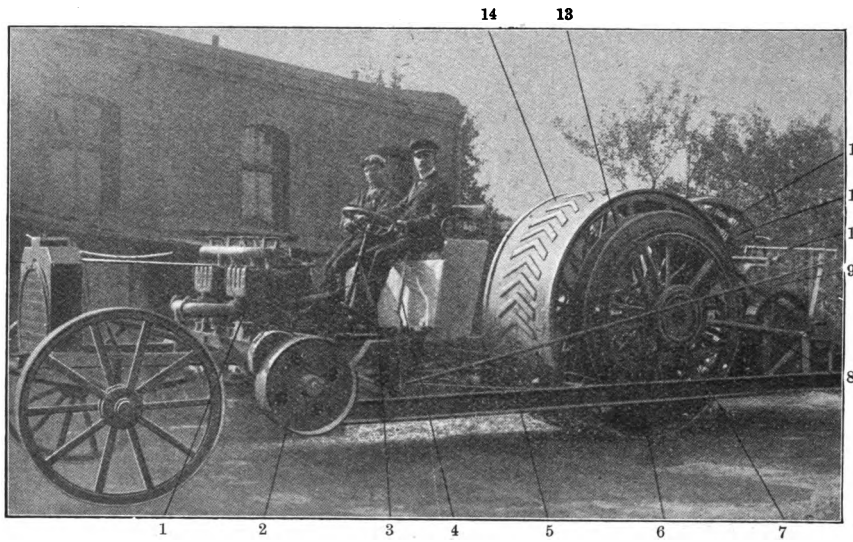

FIG. 230.—Troost tractor.

1, Engine; 2, Flywheel; 3, Fuel regulation; 4, Lever for changing gear; 5, Rod for change gear; 6, Chain wheel; 7, Roller bearing for power wheel; 8, Chain tightening device; 9, Gear; 10, Ratchet rod; 11, Coupling; 12, Driving belt pulley; 13, Wire rope drum; 14, Driving wheel.

the car frame is jacked up and the driving wheel revolves with the drum, acting as a flywheel. Additional gears and couplings which would otherwise be necessary for operating the drum, are thus obviated.

Rail Vehicles driven by Internal Combustion Engines.

As has been already stated, the first petrol engine built by the Maschinenbau-Aktiengesellschaft vorm. G. Egestorff, in 1879, was also at once used for driving a railway vehicle. This is illustrated in fig. 231.

Daimler then brought out in 1887 a rail car, provided with a high speed petrol engine, which worked for a long period the passenger traffic between the Wilhelmsplatz and the Kursaal, Cannstatt. The same car was also used during the Bremen Exhibition of 1890.

This Daimler "Summer car" is shown in fig. 232. As will be seen, it

Digitized by Google

consists of two seats carried on wheels; the 2 h.-p. engine is fitted in a casing at the back. The driver sits at the back on a saddle.

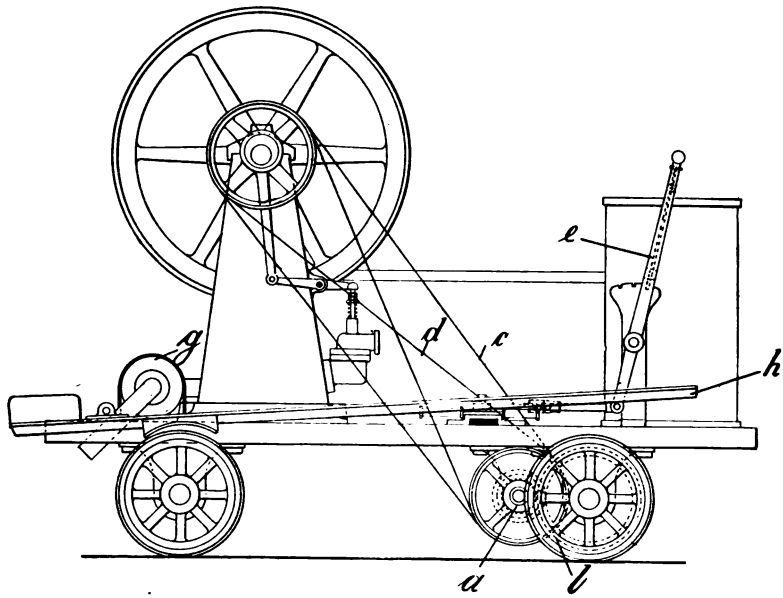

FIG. 231.—First rail vehicle driven by a petrol engine, built in 1880.

a, *b*, Toothed pinion gears; *c*, *d*, Uncrossed and crossed belts for forward and backward running; *e*, Handle for shifting the belts; *h*, Foot-brake; *g*, Silencer.

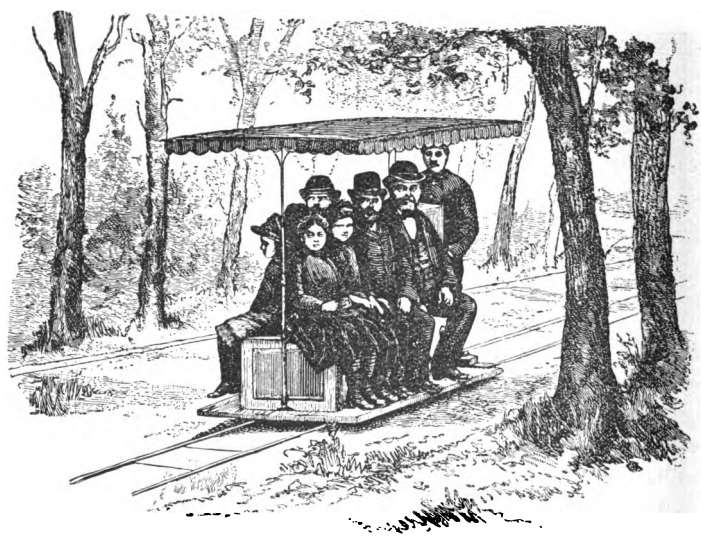

FIG. 232.—The Daimler "summer car," 1887.

The power is transmitted to the axle by two sets of toothed gear for 7 and

Digitized by Google

15 kms. (4·35 and 9·35 miles) speeds. No provision was made for reversing. The gauge was 600 mm. (23⅝ in).

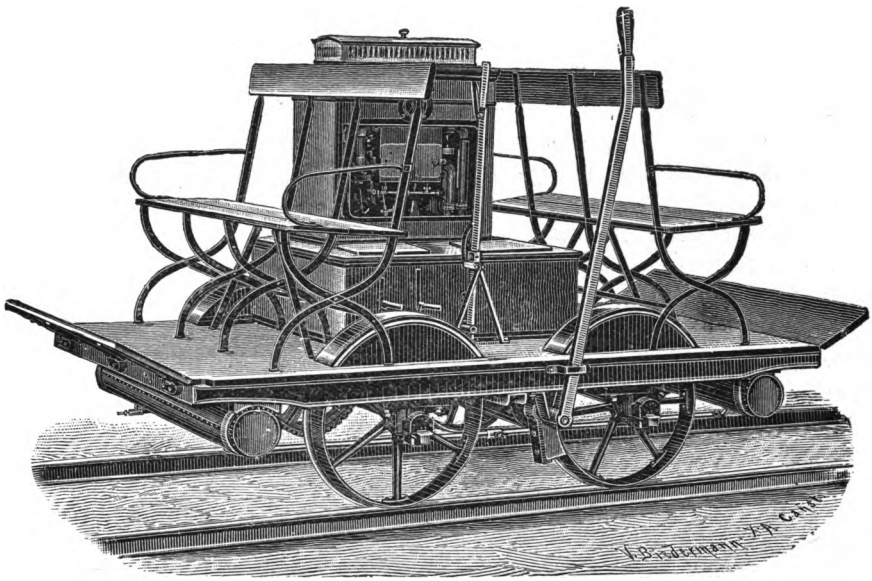

FIG. 233.—The Daimler motor-driven trolley.

FIG. 234.—The Daimler motor-driven railway carriage.

Other rail cars of that date are illustrated in fig. 233, which shows a trolley, and in fig. 234, this latter being a view of a motor-driven railway carriage

Digitized by Google

built for Fr. Krupp, for service between the firing ground and the township of Meppen.

Recent Locomotives.

Locomotives driven by high-speed engines have not met with much success. Engines working at a more moderate speed, capable of running during longer periods, of greater economy and safety in working, were more suitable to this class of vehicles, as they have also proved in factory driving. The Gasmotorenfabrik Deutz and the Motorenfabrik Oberursel are among the few German firms whose names are connected with the construction of locomotives fitted with internal combustion engines. The peculiar features of these engines, and their present development, have led to the building of locomotives of this type for light traffic only, and not for main lines.

They are now used mainly in mining, in contractor's works, in the exploitation of forests, for tunnel and canal construction, in brick works, sugar works, bridge building, etc.

The petrol or benzol consumption of the locomotives, according to the conditions of track and traffic, amounts to 0·05 to 0·09 kg. per km. (·17 to ·29 lb.) per mile run.

Figs. 235 to 239 show various locomotives of this description built by the Gasmotorenfabrik Deutz and the Aktiengesellschaft Oberursel.

Boats Fitted with Internal Combustion Engines.

The first boat to be driven by a petrol engine was that illustrated in fig. 240, built by Daimler in 1886. Fig. 241 shows the internal arrangement of a Daimler boat built in the early 'nineties in America. The boat is fitted with the two-cylinder engine described in the ninth chapter.

Recent Motor-boats.

The fact that internal combustion engines do not start automatically, and the difficulty of reversing, has always been a hindrance to the adoption of these engines to motor-driven boats; the lack of a simple and cheap means of reversing has always formed a great impediment to the development of motor-boats.

In his first boat, Daimler used a friction-driven gear for running astern. Later builders turned their attention to the device known as the "Sail propeller," which was used in former times in sailing ships. In this device the propeller blades were made to swivel in the boss, being worked by means of a rod placed in the hollow propeller shaft. When there was a good wind, the sails were used for driving the ship, the propeller ceased working, and its blades were so placed that they offered the least resistance to the movement of the vessel.

In adapting this device to motor-boats, it was only necessary to increase the shifting of the blades in the boss in order to make the boat travel astern while the engine continued to run in the same direction as when moving ahead.

Digitized by Google

In the early 'nineties this reversible propeller had been improved to such an extent that it was suitable for the propulsion of boats; the Firm Karl Meissner, Hamburg, has given especial attention to the manufacture of this type of propeller.

Fig. 235.—Field and forest track locomotive, equipped with a 32 h.-p. engine, built by the Gasmotorenfabrik Deutz.

It was only quite recently, with the construction of still larger craft—full-sized ships, in fact—fitted with internal combustion engines, that the efficiency and the reversibility of this type of propeller were found to be unsatisfactory. For large powers, intermediate transmission gear is quite out of the question

Digitized by Google

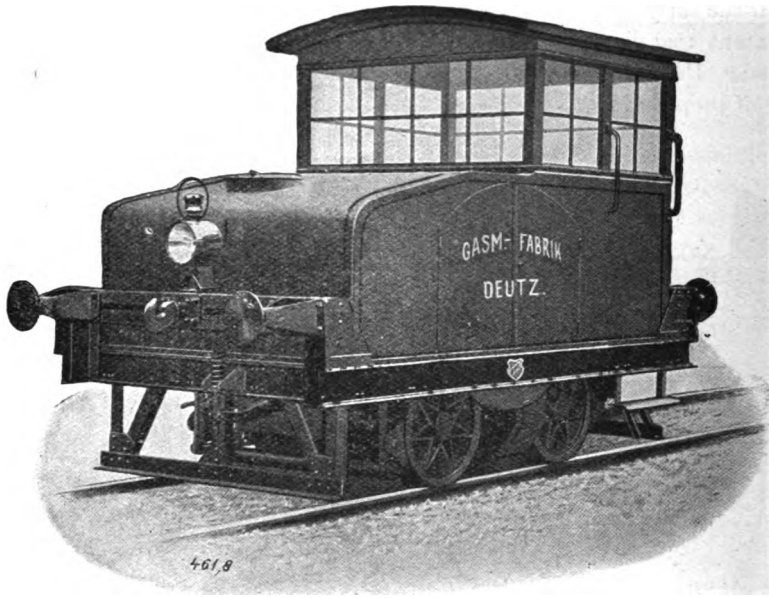

FIG. 236.—Shunting locomotive, equipped with a 60 h.-p. engine, built by the Gasmotorenfabrik Deutz.

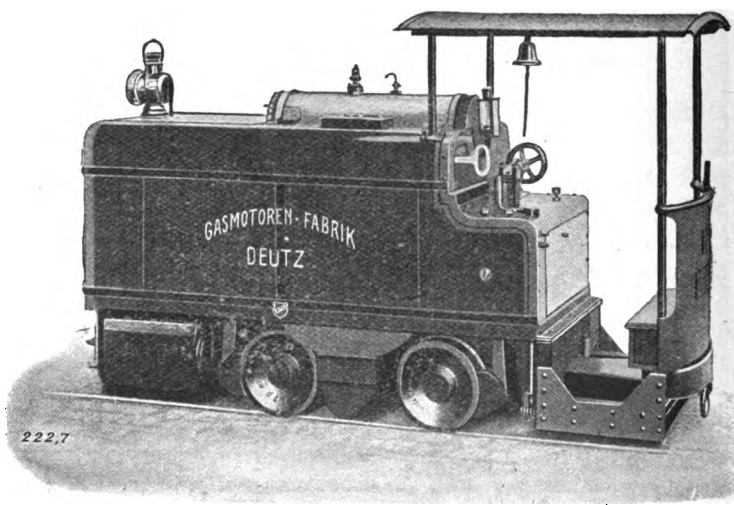

FIG. 237.—Mining locomotive, equipped with a 32 h.-p. engine, built by the Gasmotorenfabrik Deutz.

Digitized by Google

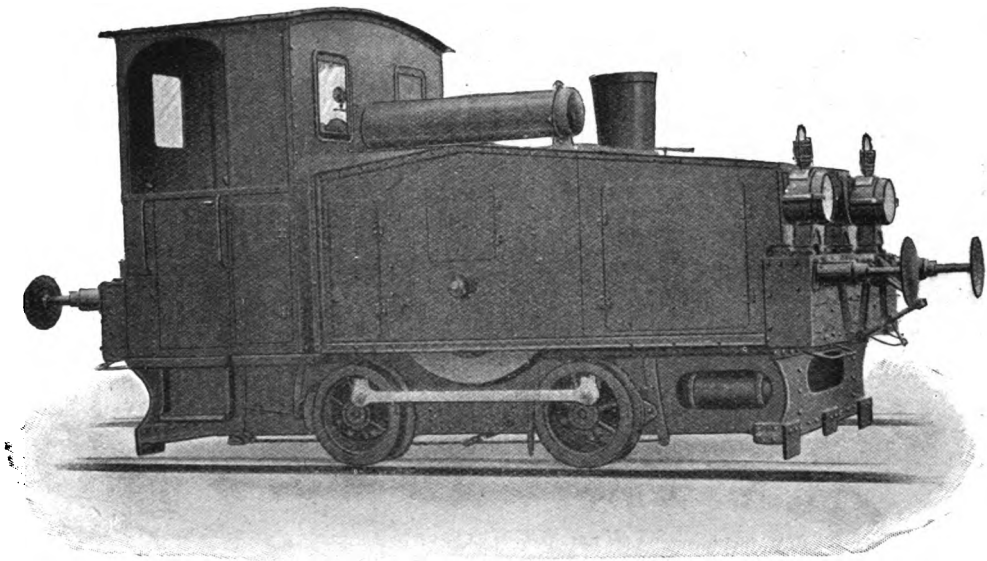

FIG. 238.—Shunting locomotive, equipped with an alcohol-petrol engine, built by the Motorenfabrik Oberursel.

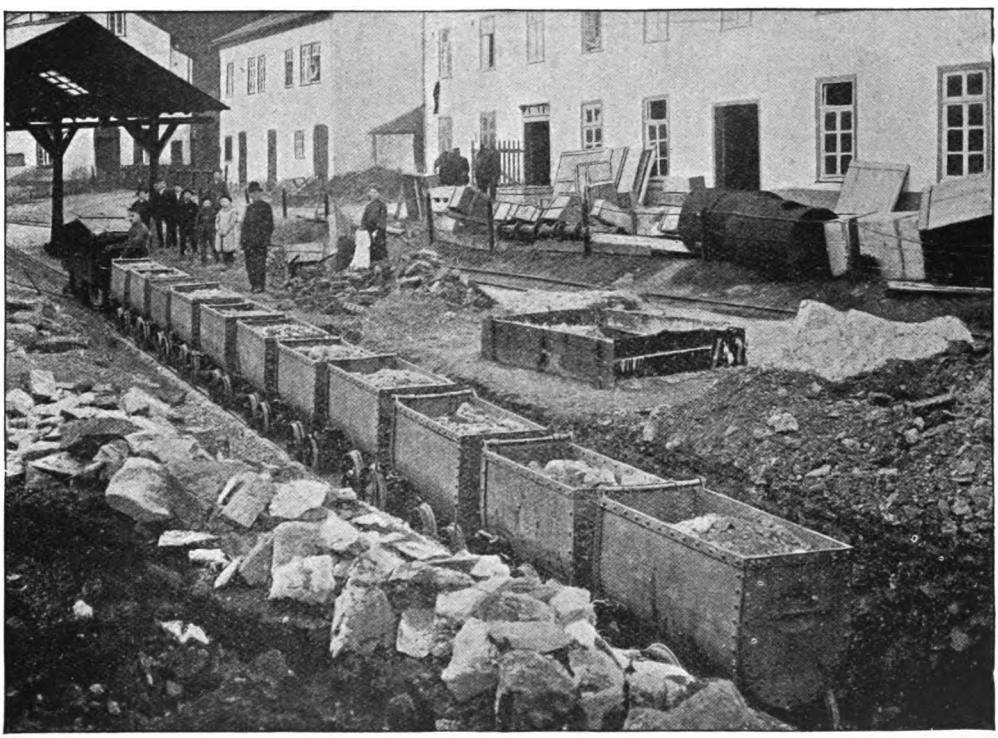

FIG. 239.—Mining locomotive in service at the Bergbau-Aktiengesellschaft Friedrichssegen, Friedrichssegen, Lahn.

Digitized by Google

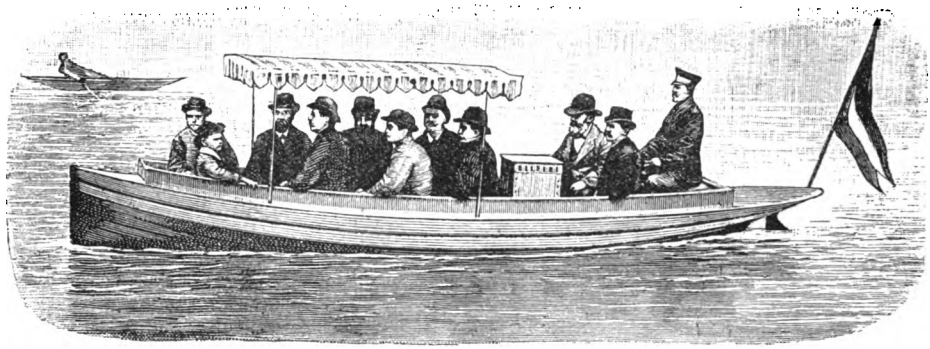

FIG. 240.—The first Daimler motor-boat, built in 1886.

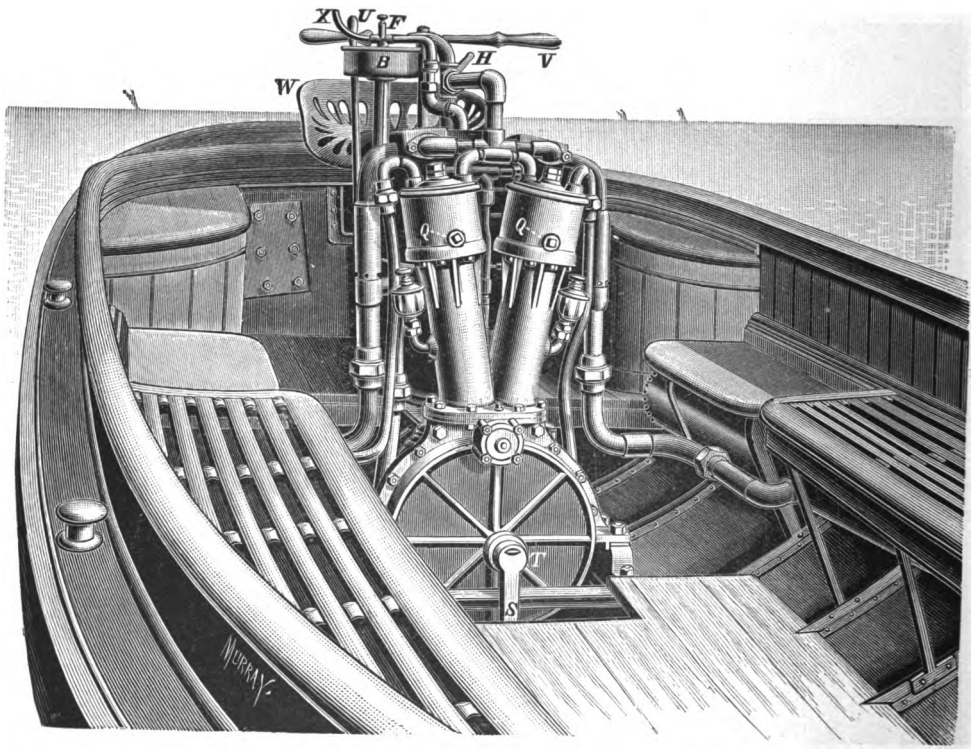

FIG. 241.—Arrangement of a Daimler boat, built in America in 1890.

W, Seat for the steersman ; V, Steering lever ; U, Lever for reversing the propeller ; H, Carburettor lever.

All the necessary levers and handles for controlling the engine are within easy reach of the steersman.

Digitized by Google

Also in large sizes the reversing of the propeller has its disadvantages. The frictional resistance which has to be overcome in operating the blades when

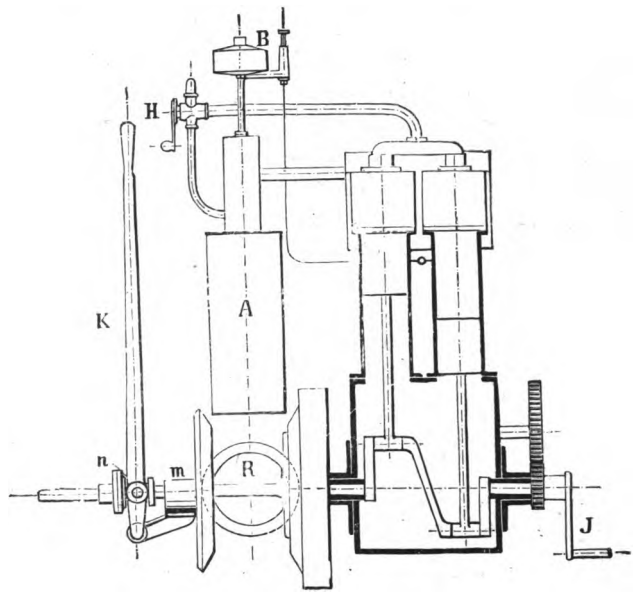

FIG. 242.—The Daimler friction gear for motor-boats.

For running astern, the clutch is drawn back from the flywheel, and at the same time the friction disc R is pressed by a hand lever against the conical surface of the disc *m* and of the flywheel.

under the full working pressure, requires such an amount of power that reversing cannot be effected quickly enough by hand. As still another

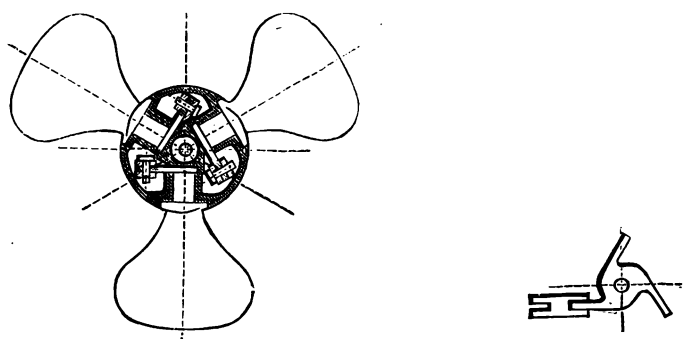

FIGS. 243 and 244.—Reversible propeller manufactured by the Motorenfabrik Grob & Co., Leipzig.

consideration, it may be stated that the shocks caused by early ignition and by the hit and miss governing, may have a very detrimental effect on the toothed gear and on the blades of the reversible propeller, since the flywheels

Digitized by Google

with which the engines can be fitted are only light. In many instances, the remarkable cases of the fracture of teeth and the loss of propeller blades, have been principally due to these shocks.

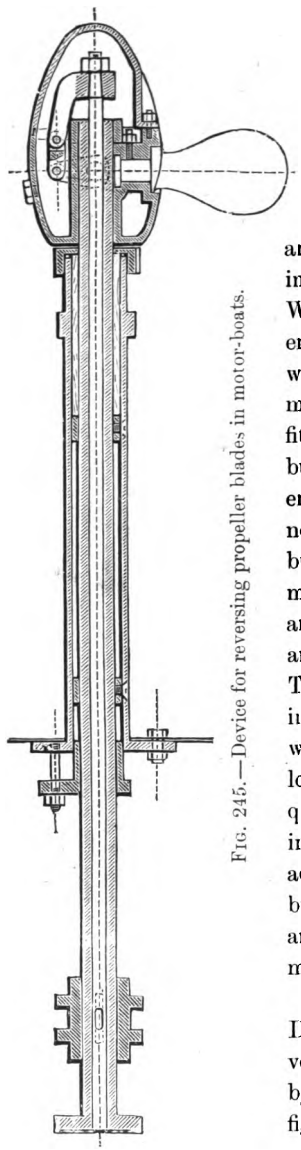

Fig. 245.—Device for reversing propeller blades in motor-boats.

All these disadvantages have resulted in active endeavours in the direction of making internal combustion engines as effective as steam engines, in regard to running and reversibility, while using propellers with fixed blades such as are used with steam propulsion, the craft being the whole time completely under control. Boat-engines are now built of about 100 h.-p. and upwards, provided with compressed-air starting and reversing devices. Messrs Gebr. Sulzer, Winterthur, build, for example, two-cycle Diesel engines for driving torpedo boats, which are fitted with such devices; the Körting engines for submarines, and also the "Antoinette" engines, are fitted with similar arrangements. Gunboats are built in Russia propelled by four-cycle Diesel engines. In these, the power of the engine is not transmitted direct to the propeller shaft, but to an electric dynamo supplying an electric motor driving the propeller shaft. The engine and dynamo act as an ordinary generating set, and the current is supplied to the electric motor. The latter can drive the propeller shaft as desired in either direction in the usual way. Attempts were made several years ago to build electric locomotives and motor-cars on this principle; but, quite apart from the heavy first cost, the losses in actual running were so great, that the small advantage gained in the shape of greater flexibility in working, was purchased at far too great an expense; attempts have, however, lately been made to revive this system.

Fig. 242 illustrates the friction gear used by Daimler in his first boat; figs. 243 and 244 the reversible propeller as introduced in the late 'nineties by the Motorenfabrik Grob & Co., Leipzig; and fig. 245 a reversing device. A reversible propeller of the latest type for larger boats, made by Karl Meissner, Hamburg, is shown in fig. 246, and Meissner motor-boats in figs. 252 to 256.

In figs. 247 and 248 are shown two reversing gears, constructed by Messrs Bieberstein & Gödicke, Hamburg, and Heinrich Kämper, Berlin-

Digitized by Google

Mariendorf. Figs. 249 to 251 show an overhanging propeller made by the Cudell-Motoren-Gesellschaft, Ltd., Berlin, N., for small craft. The engine propeller shaft, and propeller, form a self-contained apparatus pivoted at the stern of the boat; the propeller shaft can be lowered, raised, and moved sideways at will. The device can also be fixed at any desired height.

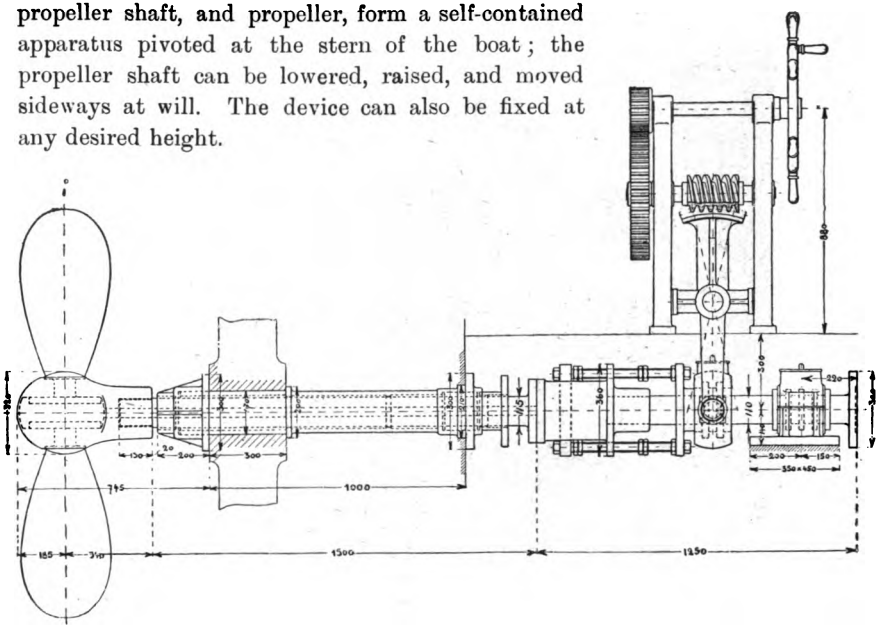

FIG. 246.—Reversible propeller manufactured by Karl Meissner, Hamburg, for large boats.

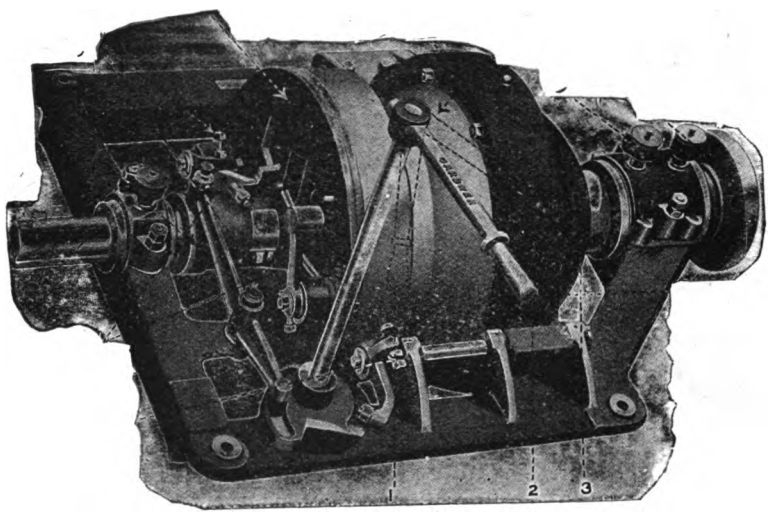

FIG. 247.—Transmission gear for ship propellers, built by Bieberstein & Gödicke, Hamburg.

Figs. 257 and 258 are views of a Thornycroft racing motor-boat, and of a Bieberstein & Gödicke motor-boat for passenger traffic.

Figs. 259 and 260 show the engine-room of a passenger and cargo ship

Digitized by Google

containing three Diesel engines, developing together 3000 h.-p., with electric transmission to the propeller shaft.

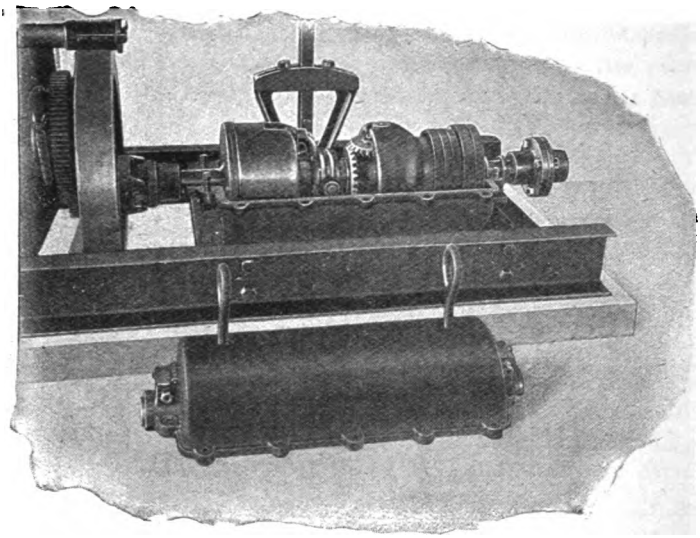

FIG. 248.—Transmission gear for ship propellers, built by Heinrich Kämper, Berlin-Mariendorf.

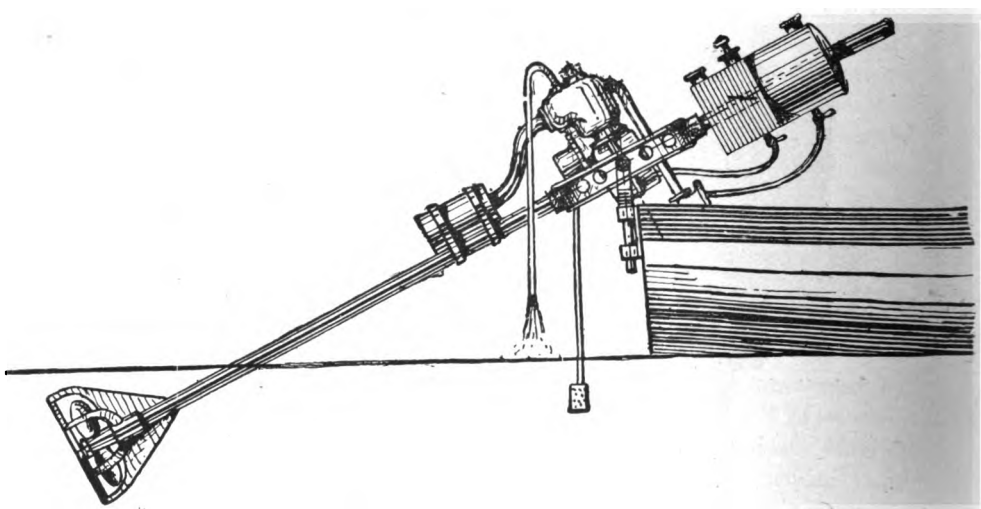

FIG. 249.—2·5 h.-p. motor-driven propeller for small boats and yachts, built by the Cudell-Motoren-Gesellschaft, Ltd., Berlin, N.

In figs. 261 and 262 is illustrated a gunboat belonging to the Russian Navy, fitted with two Diesel engines and with electric transmission to the propeller shaft.

Digitized by Google

Airship Engines.

The first attempts at construction of dirigible balloons were made in France by Renard, who, in the early 'eighties, succeeded in manufacturing a

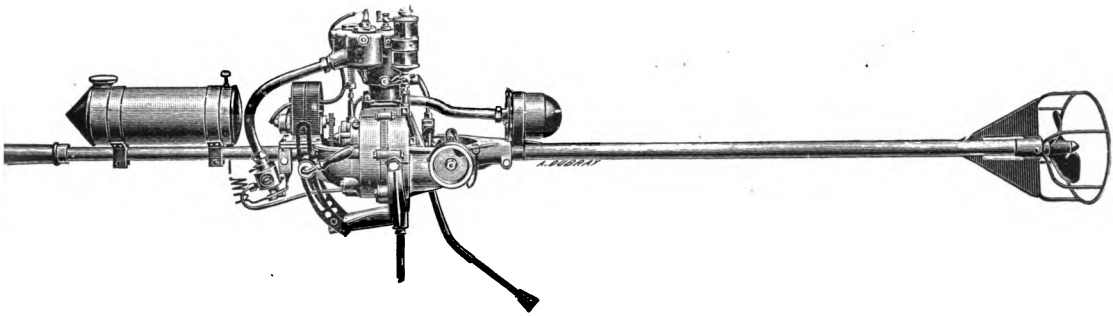

FIG. 250.—2 h.-p. motor driven propeller, built by the Cudell-Motoren-Gesellschaft, Ltd., Berlin, N.

balloon which was driven by a gas engine at a speed sufficient to enable it to be steered. Shortly afterwards, experiments were also carried out in Germany,

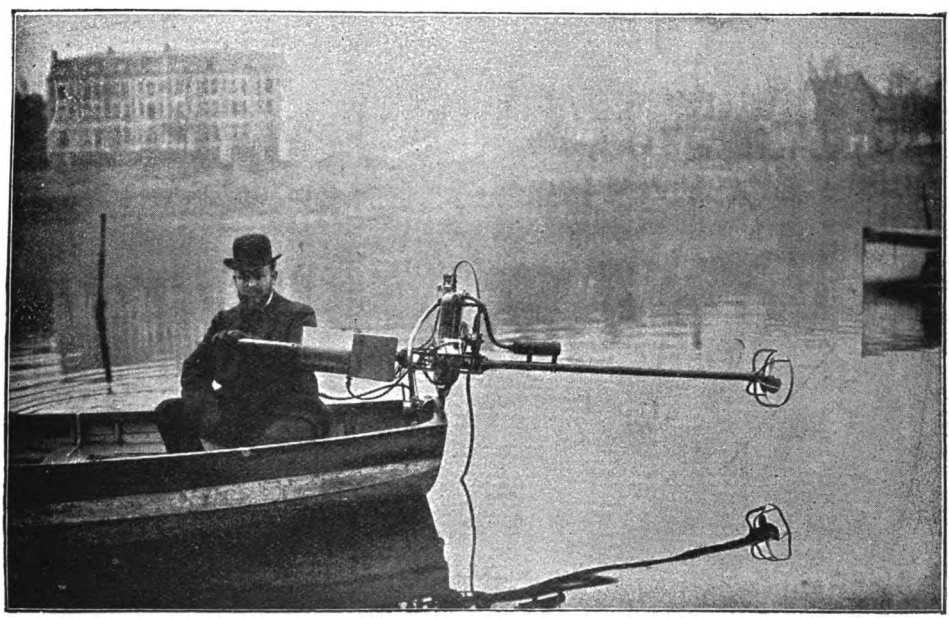

FIG. 251.—Boat equipped with the Cudell propelling device.

but these did not prove successful. A balloon which at that time made its first ascent from the Tempelhof, near Berlin, caught fire in the air, and its occupants were killed.

Digitized by Google

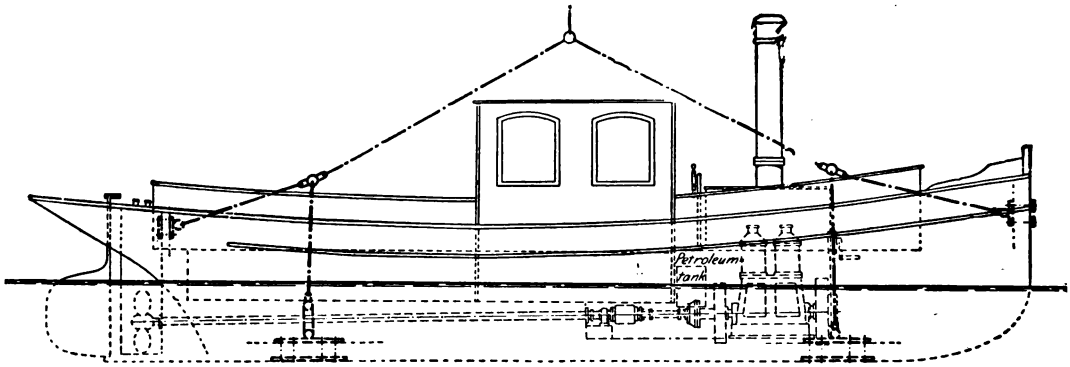

FIG. 252.

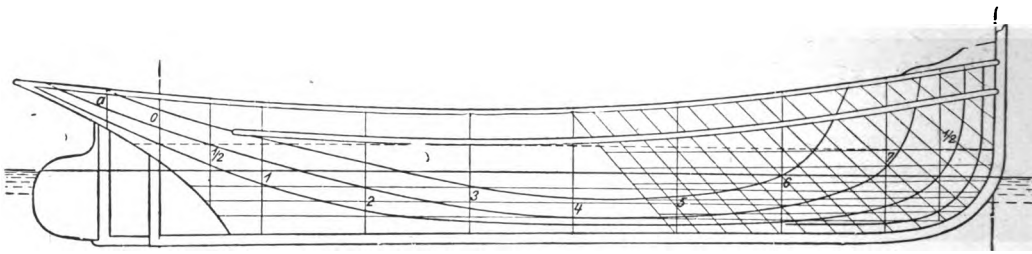

FIG. 253.

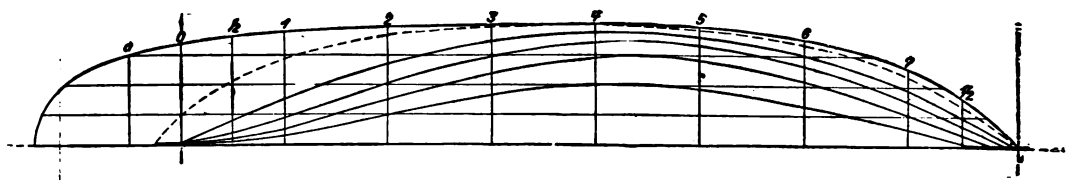

FIG. 254.

FIGS. 252 to 254.—Motor-boats built by Karl Meissner, Hamburg.

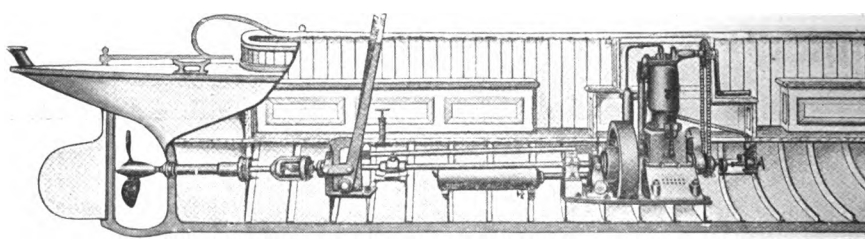

FIG. 255.—Longitudinal section of a Karl Meissner motor-boat.

Digitized by Google

FIG. 256.—View of a Karl Meissner motor-boat.

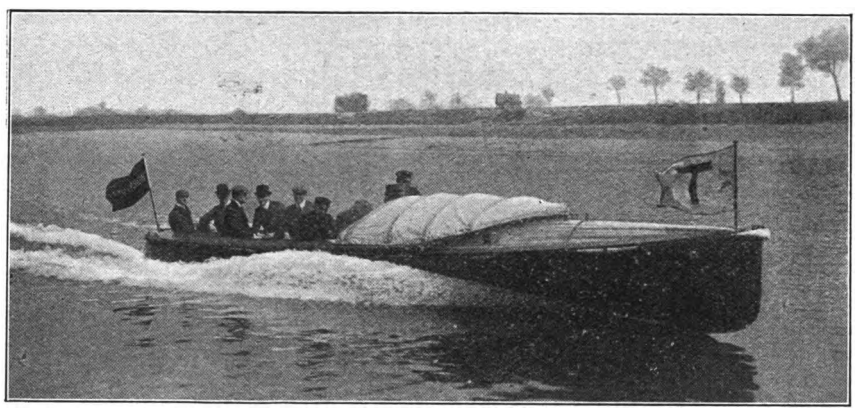

FIG. 257.—Racing motor-boat, built by Messrs John J. Thornycroft & Co., London.

Digitized by Google

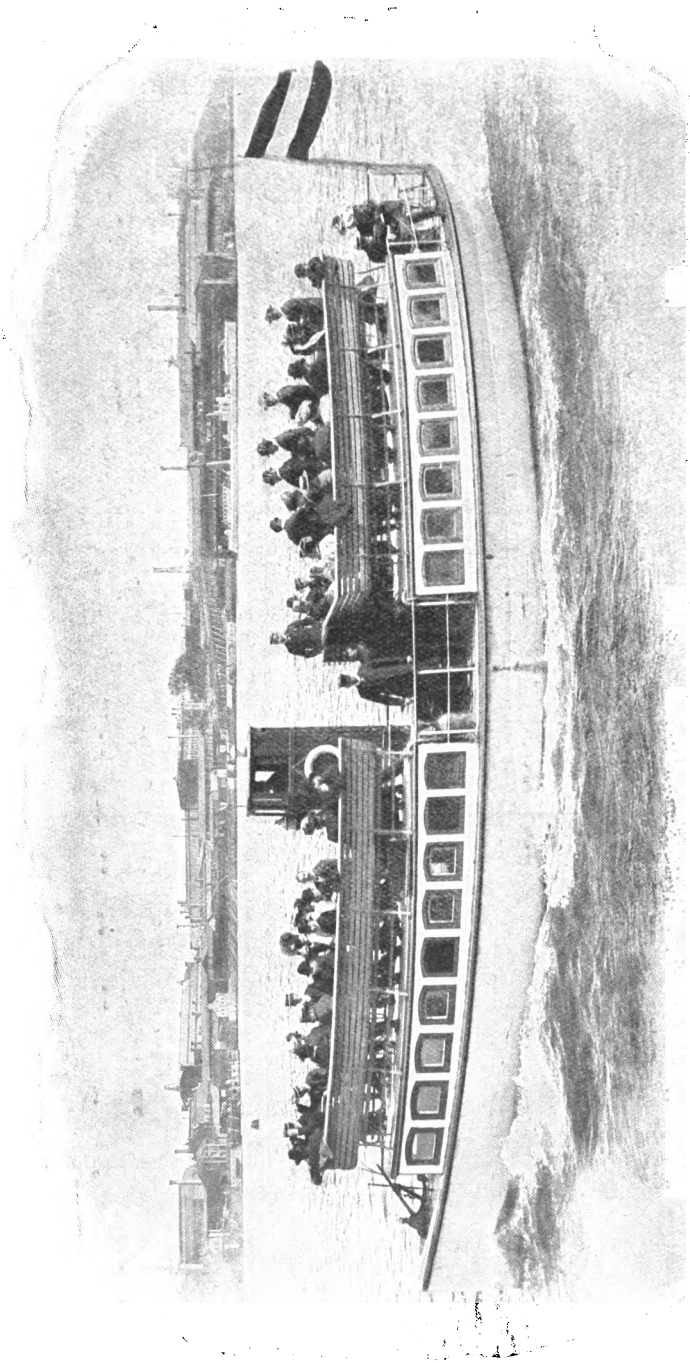

FIG. 258.—Motor-boat built by Messrs Bieberstein & Gödicke, Hamburg.

Digitized by Google

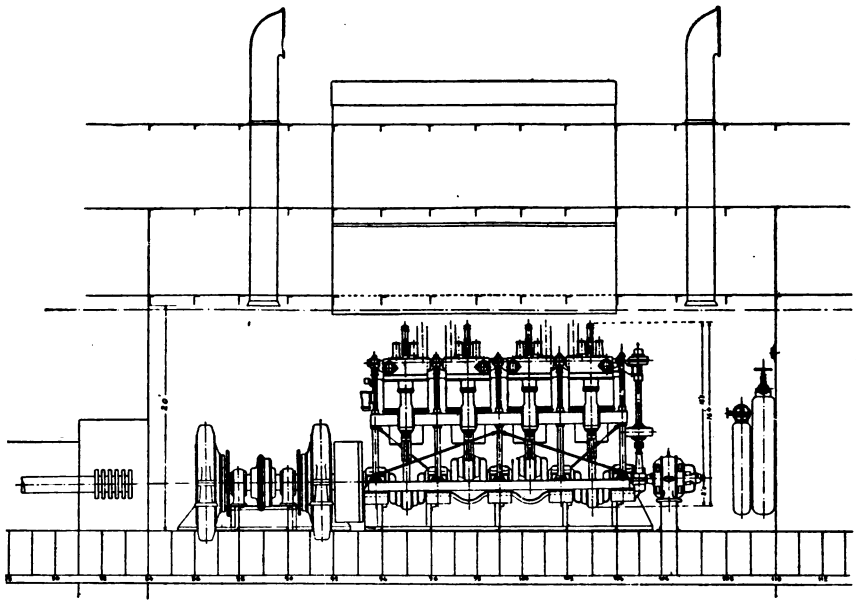

FIG. 259.

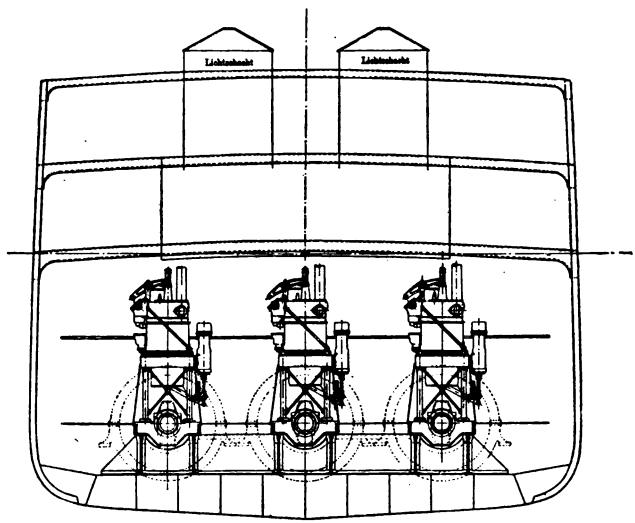

FIG. 260.

FIGS. 259 and 260.—Engine-room of a passenger and cargo ship, with three four-cylinder Diesel engines of 3000 h.-p. in the aggregate, with electric transmission to the propeller shaft.

Cylinder diameter, 27·5 in.; stroke, 30·3 in.; speed, 150 revs. per minute; weight of each engine, 110 tons; normal power of each electric motor, 670 h.-p.; weight of each electric set, 60 tons; weight of an electro-magnetic clutch coupling, 3 tons; weight of one propeller with shaft, 15 tons; total weight of mechanical equipment, 564 tons; weight of equipment per horse-power developed, 188 kg. (414 lbs.).

Digitized by Google

Otto Lilienthal then experimented with an apparatus which had no gas balloon, but with it he endeavoured to secure a motion similar to the flight of birds. He succeeded so far, that when he dropped with his machine from a height he was able to cover the distance of several hundred yards. But Lilienthal also met his death in the course of one of his experiments.

In the meantime the petrol motor had come to the front, and had been so greatly improved that fresh hopes could be entertained of building steerable balloons. For the older type of balloons, the spherical shape was at once the

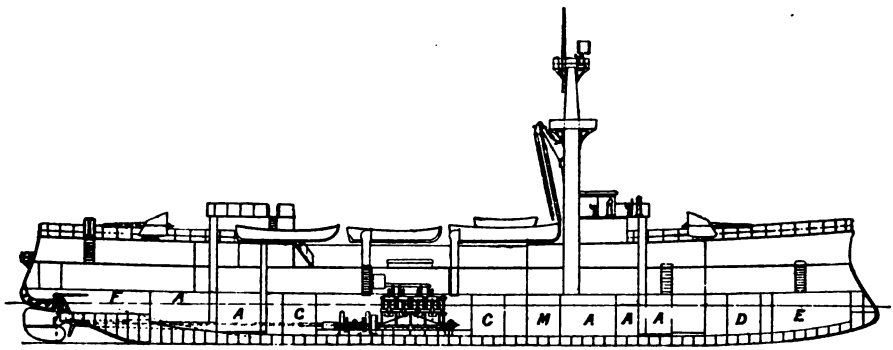

FIG. 261.

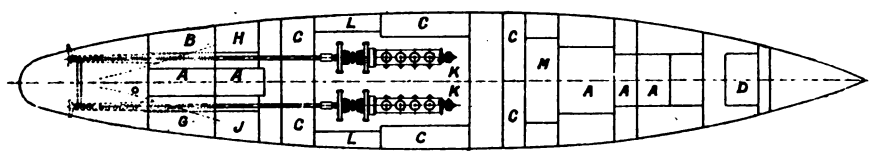

FIG. 262.

FIGS. 261 and 262.—Russian gunboat, with Diesel engines and electric transmission to the propeller shaft.

Extreme length, 220 ft. 6 in.; breadth amidships, 37 ft.; draught, 10 ft. 9 in.; displacement, 1316 tons; maximum speed, 13 knots; power developed, 1400 h.-p.; fuel consumption per horse-power hour, 0·200 kg. (·440 lb.); fuel capacity, 155 tons.

A, 120 mm. and 75 mm. gun ammunition; B, Biscuit stores; C, Crude petroleum tanks; D, Gun spare parts; E, Deck stores; F, Steering room; G, Provisions; H, Officers' quarters; J, Captain's cabin; K, Engines; L, Engine spare parts; M, Dynamo room.

most simple and the most correct, for the greatest possible quantity of gas could be enclosed with the least possible surface. But with the new conditions imposed by the desire for dirigibility, this shape had to be abandoned, and a cylindrical shape with pointed ends adopted. The design up to that time followed in the construction of the car had also to be modified to meet the new conditions, and to take the engine. The balloon netting had also to be replaced by rigid connections, so that the car and the balloon should act together.

The efforts made in these directions have resulted in the production of the

Digitized by Google

various types of airships now available. In the Zeppelin rigid system, the balloon body is built of a rigid aluminium-bronze frame, on which the gas-tight canvas is spread. All parts—the car, the propellers, the vertical and horizontal steering gear—are fitted to the bars forming the frame. It is evident that an airship of this rigid type can only be transported over land under great difficulties, and cannot descend on solid ground without previous preparation. For these reasons Zeppelin has built his airship, from the time he commenced, in a floating shed, and always starts his journeys from this

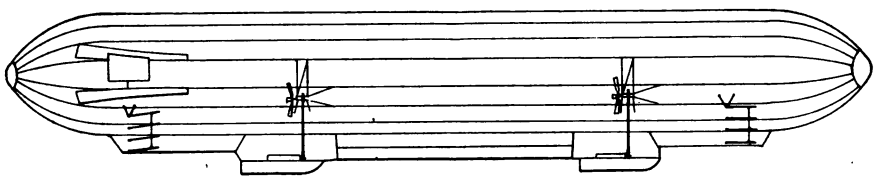

FIG. 263.—Dirigible airship of Count von Zeppelin (rigid system).

shed. Being dependent in this way upon a large expanse of water, which must be as calm as possible, for alighting, is one of the great disadvantages of the rigid system. For this reason, other makers, both German and French, have selected a less rigid type; these have retained the collapsible balloon cover, giving it the necessary rigidity by increasing the gas pressure. The gas bag, contrary to the practice in the older type of balloon, must be completely closed in the case of steerable airships. The car is made long and

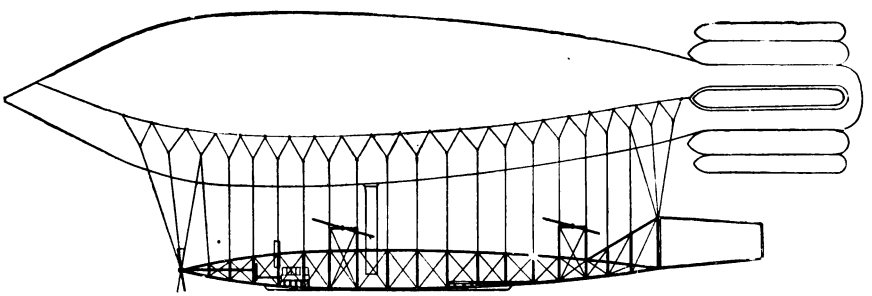

FIG. 264.—Dirigible airship "La Ville de Paris" (semi-rigid system).

rigid; this carries the engines, and is fitted with the gear and propelling devices. Instead of the netting, the balloon is surrounded by wide canvas bands.

Since the gas in the balloon expands or contracts by $\frac{1}{273}$ of its volume for each degree centigrade difference in temperature, the gas pressure inside the balloon inevitably rises or falls, quickly following the variations in temperature, and the cover may thus easily be subjected to too high a pressure. In the older type, the pressure was regulated automatically through the bottom opening. In the closed balloons, internal air-sacks or ballonets are resorted

Digitized by Google

to, fitted with an exterior pendant hose-pipe. The ballonet can be inflated through this pipe by a fan, and kept in an inflated state.

Fig. 263 shows the Zeppelin rigid airship, and fig. 264 the semi-rigid French airship "La Ville de Paris."

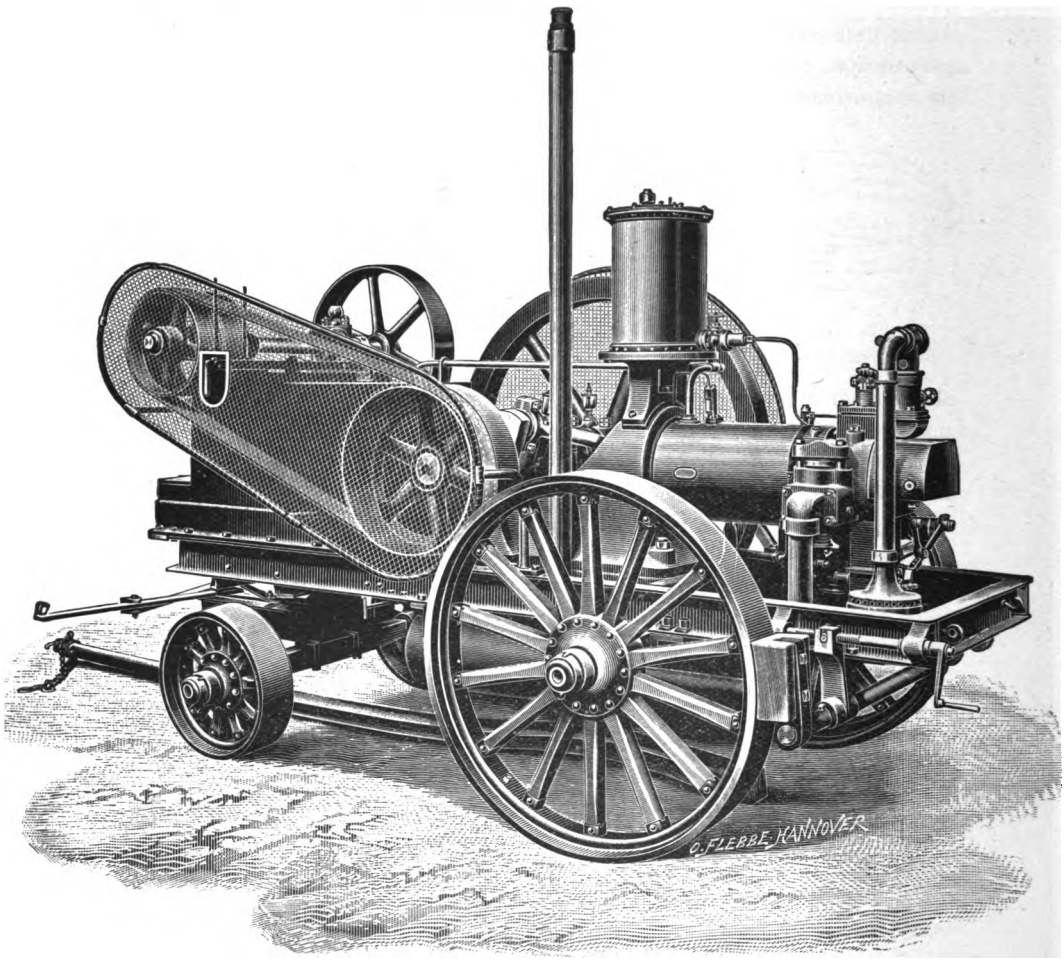

FIG. 265.—Locomobile with belt transmission, built by the Gasmotorenfabrik Deutz.

Portable Engines.

The internal combustion motor has been developed to a very considerable extent in the form of portable engines. The fuel used in such cases is either crude benzol, "ergin," or paraffin. Petrol, owing to its comparatively high cost and the risk of fire that accompanies its use, is but little employed. As in the case of locomotives, stationary slow-speed engines are mostly used for locomobiles. In the latter, evaporation cooling is usually employed,

Digitized by Google

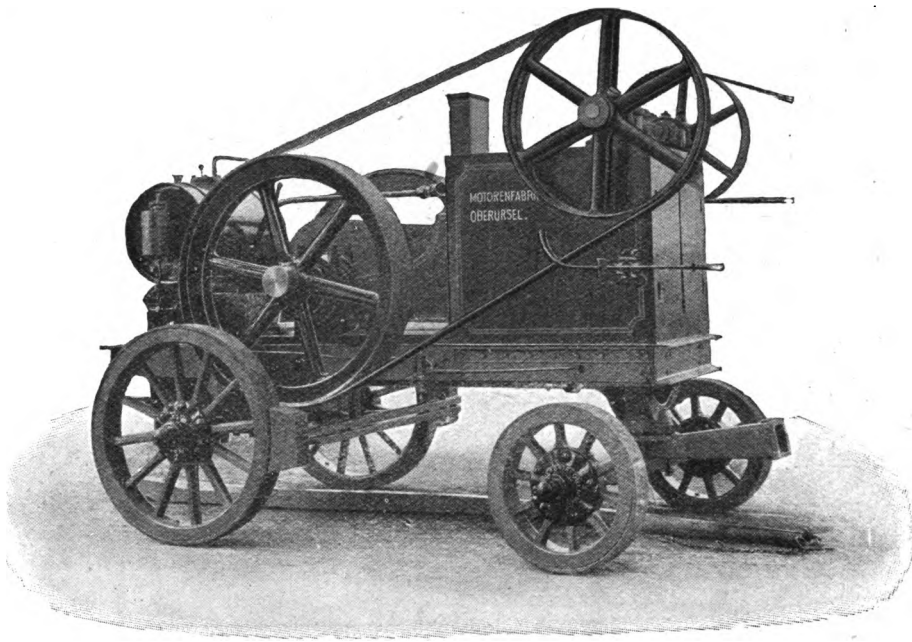

FIG. 266.—Locomobile with transmission gear, built by the Motorenfabrik "Oberursel."

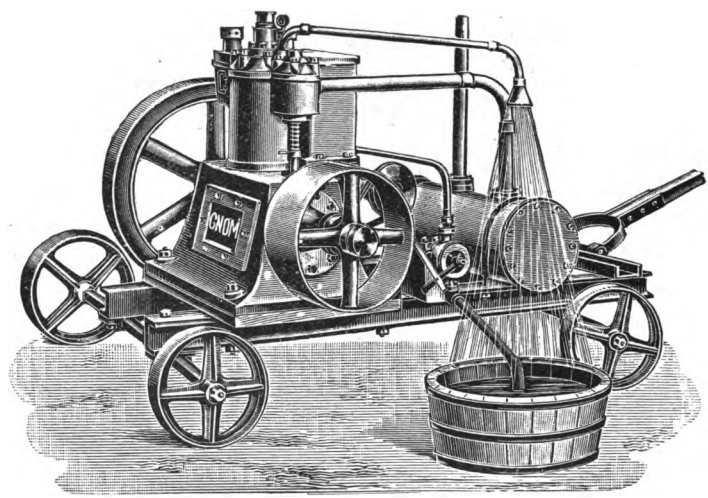

FIG. 267.—2 to 6 h.-p. locomobile, built by the Motorenfabrik "Oberursel."
Price £118 to £190.

Digitized by Google

though surface and air cooling, to which reference will be made further on, are also used. In order that the portable engines may be utilised for various

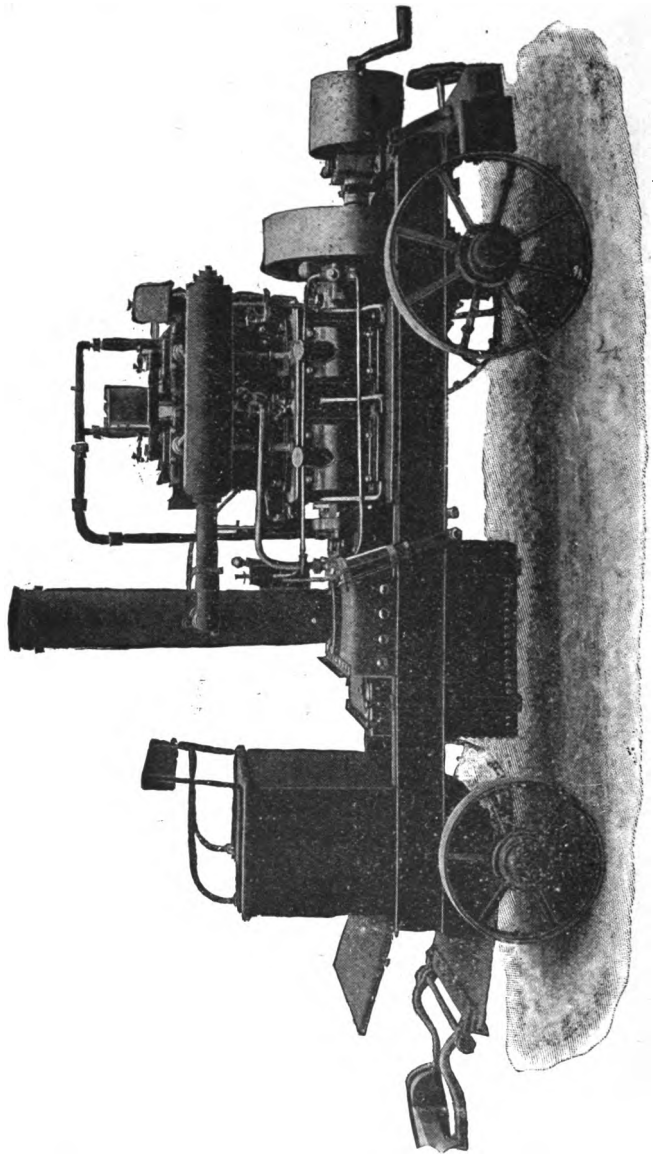

Fig 268.—Locomobile built by Bieberstein & Gödicke, Hamburg.

machines running at a high speed, they are as a rule provided with belt transmission gear.

Figs. 265 to 272 show a number of portable engines built by various manufacturers.

Digitized by Google

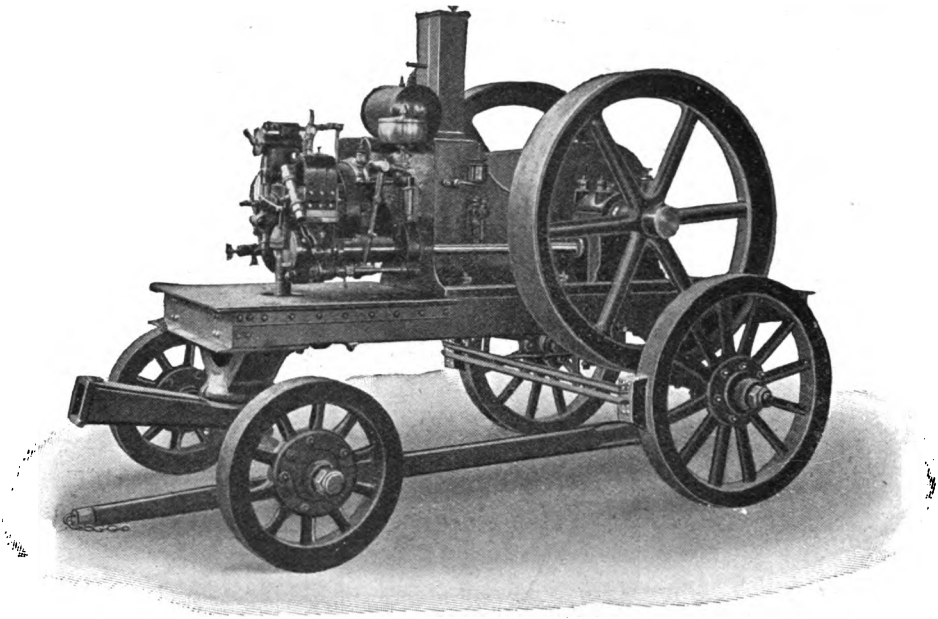

FIG. 269.—Locomobile built by the Motorenfabrik "Oberursel."

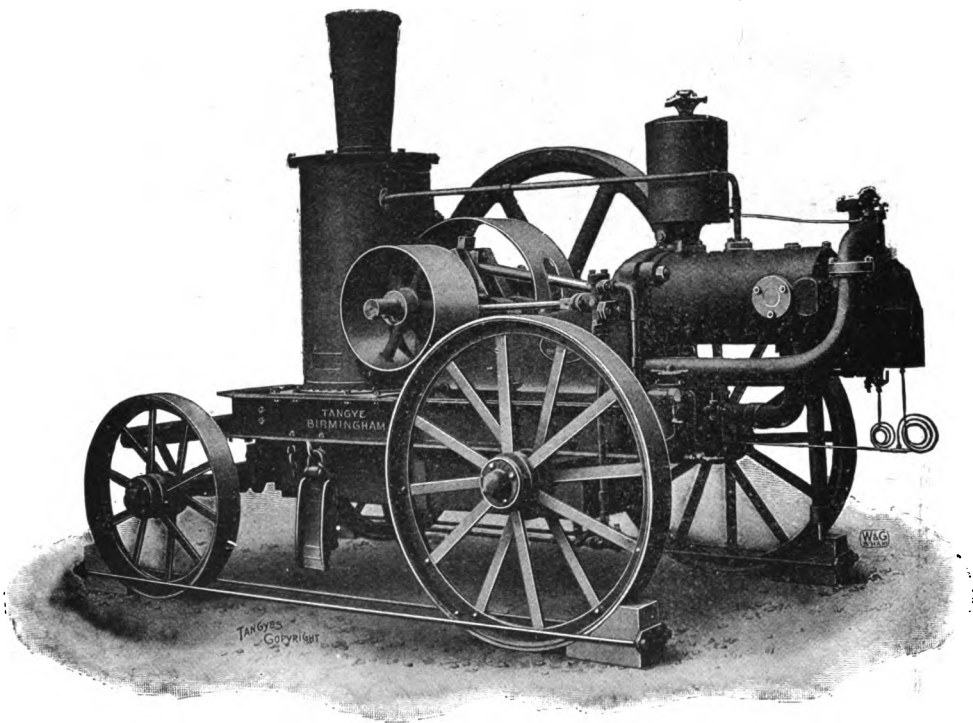

FIG. 270.—Locomobile built by Tangyes, Ltd., Birmingham.

Digitized by Google

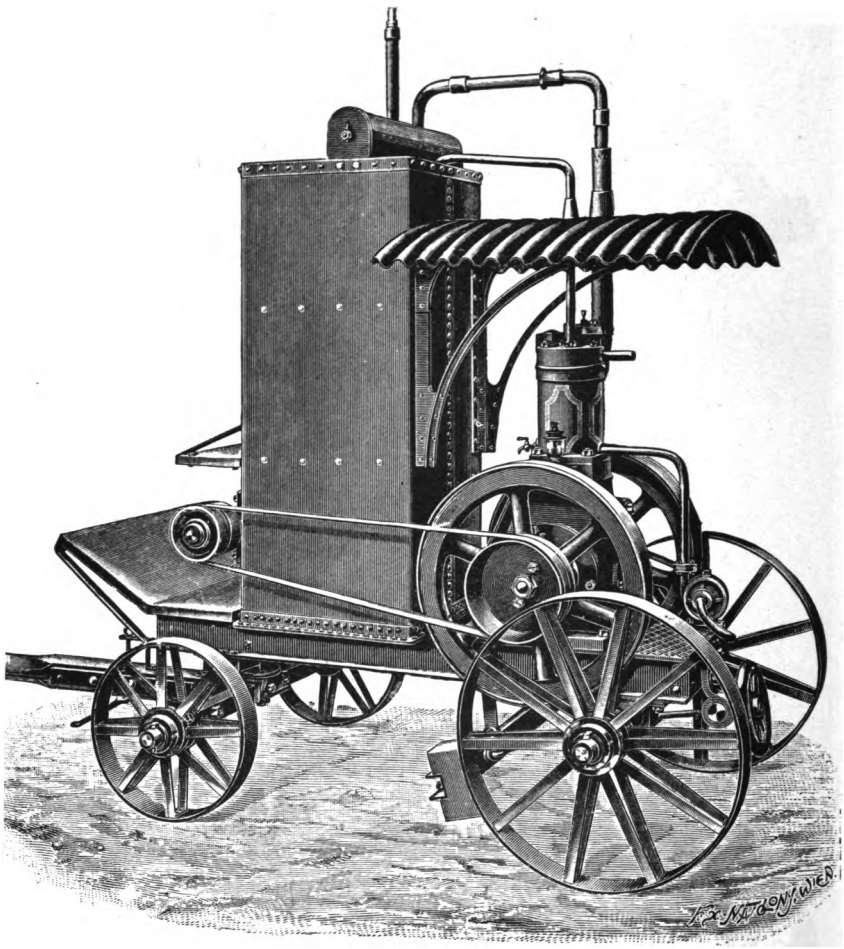

Fig. 271.—Locomobile built by Ganz & Co., Budapest.

Digitized by Google

Motor-Driven Water- and Air-Pumps.

Internal combustion engines have also been largely employed for driving pumping plants for supplying water to small towns, railway watering stations,

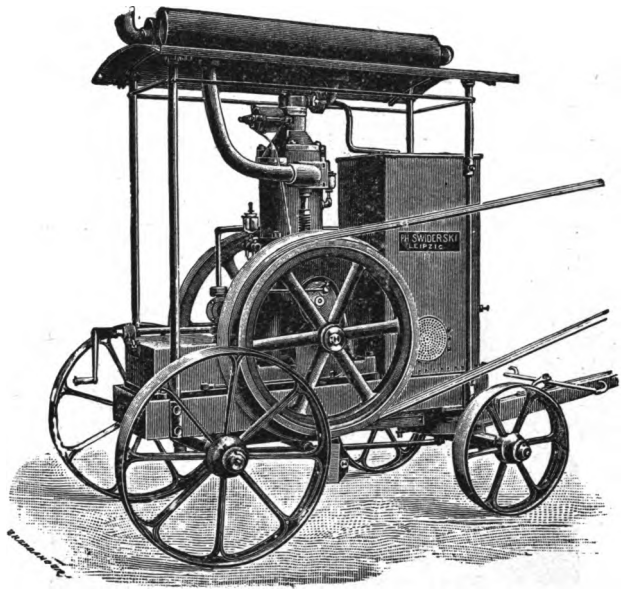

FIG. 272.—Locomobile built by the Maschinenbau A. G., vorm. Ph. Swiderski, Leipzig.

agricultural districts, kitchen gardens, and so forth. The larger pumps are driven by belting, gears, or chains; in small installations, the engine and pump are direct coupled. Several applications are shown in figs. 273 to 284.

Internal combustion engines are also put to many other uses. They are

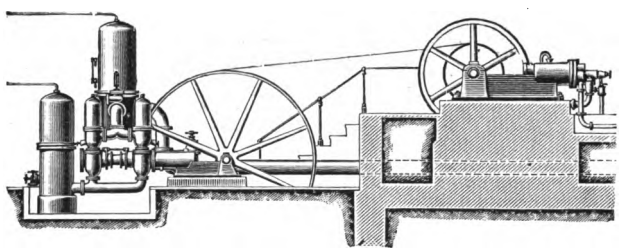

FIG. 273.—Engine-driven waterwork installation, built by the Gebr. Körting Co., Körtingsdorf-Hanover.

employed, for instance, in building construction, for operating fire-engines, driving portable dynamos, ploughs, turntables, traversers, etc. Several examples of such applications are illustrated in figs. 285 to 292.

Digitized by Google

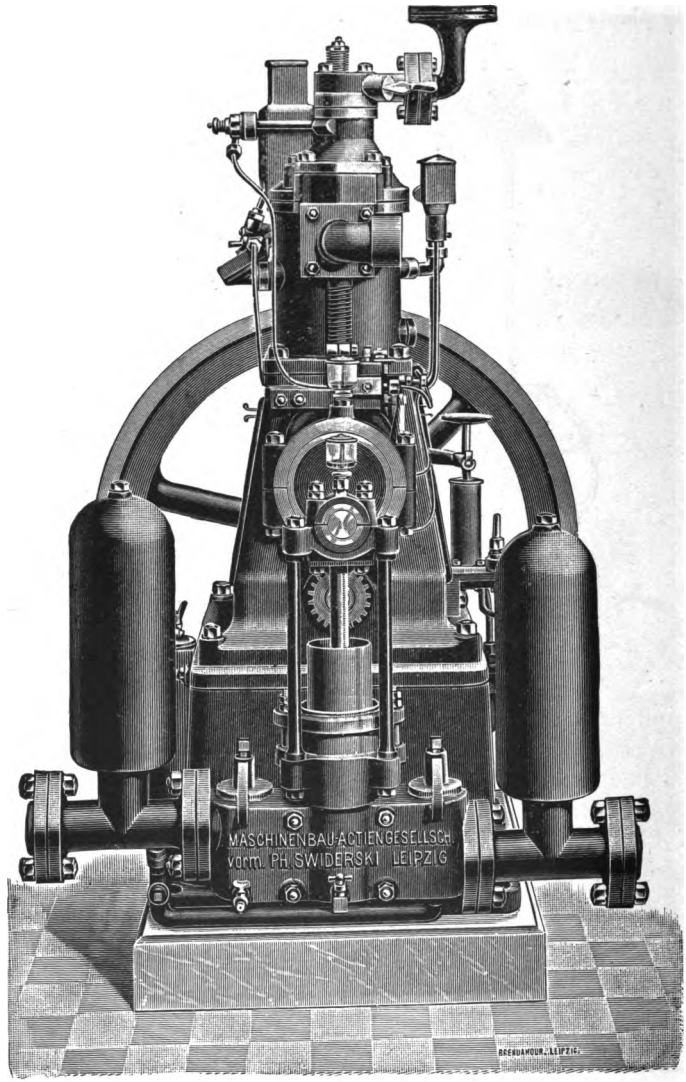

FIG. 274.—The Swiderski engine-driven pump.

Digitized by Google

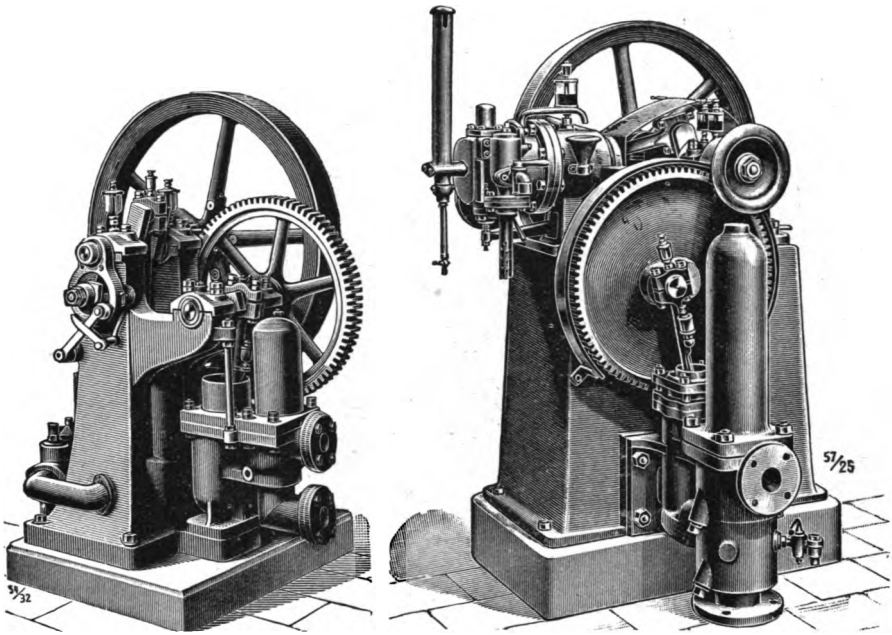

FIGS. 275 and 276.—Körting engine-driven pumps.

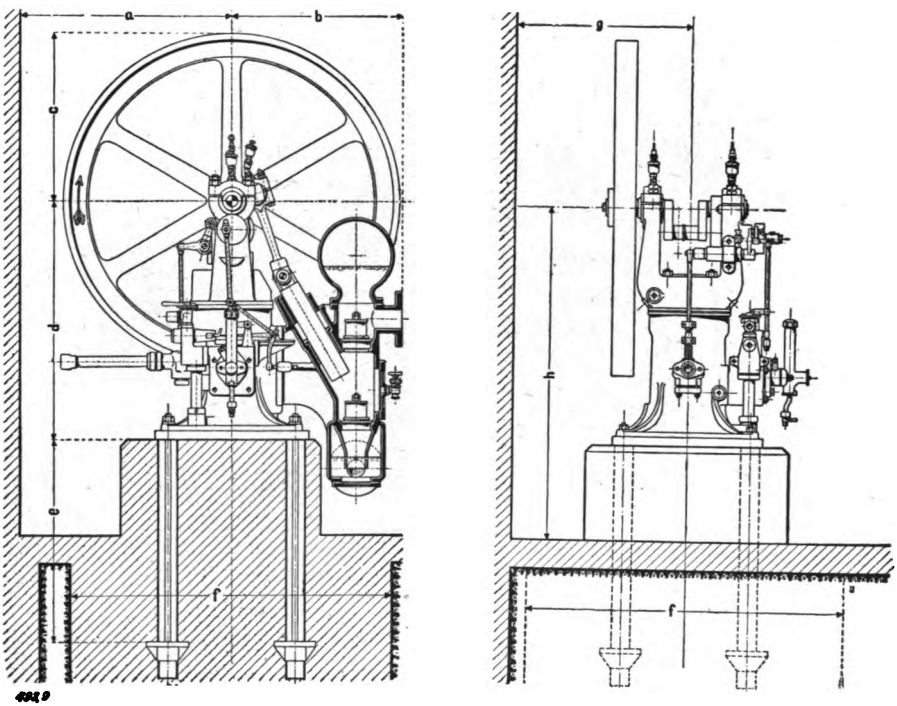

FIGS. 277 and 278.—Engine-driven pumps, built by the Gasmotorenfabrik Deutz.

Digitized by Google

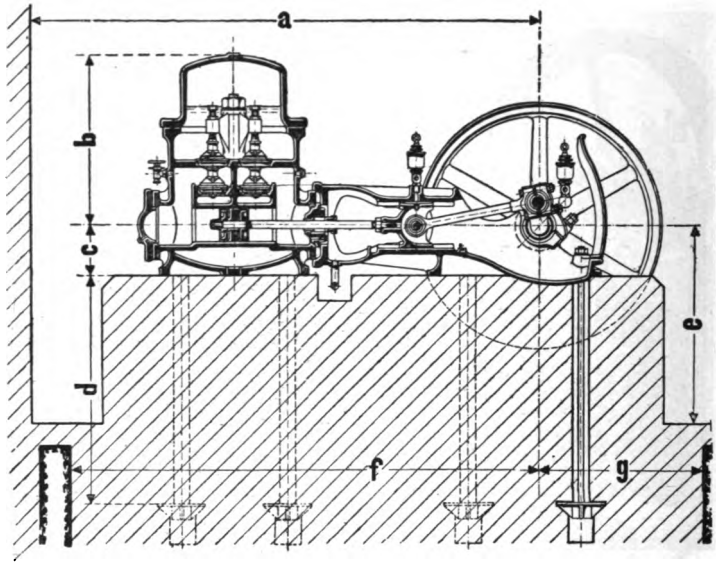

FIG. 279.

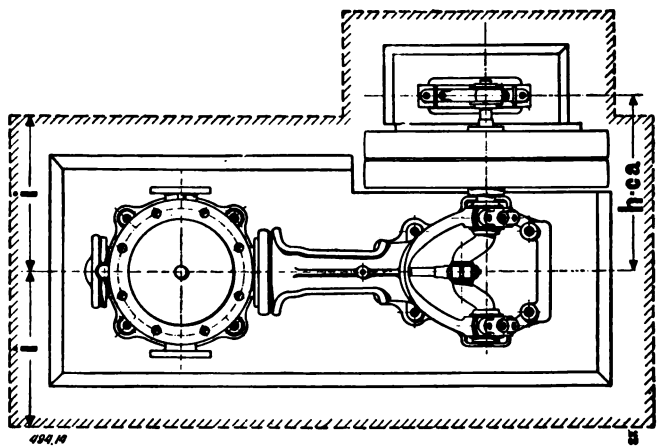

FIGS. 279 and 280.—Pumps built by the Gasmotorenfabrik Deutz.

Digitized by Google

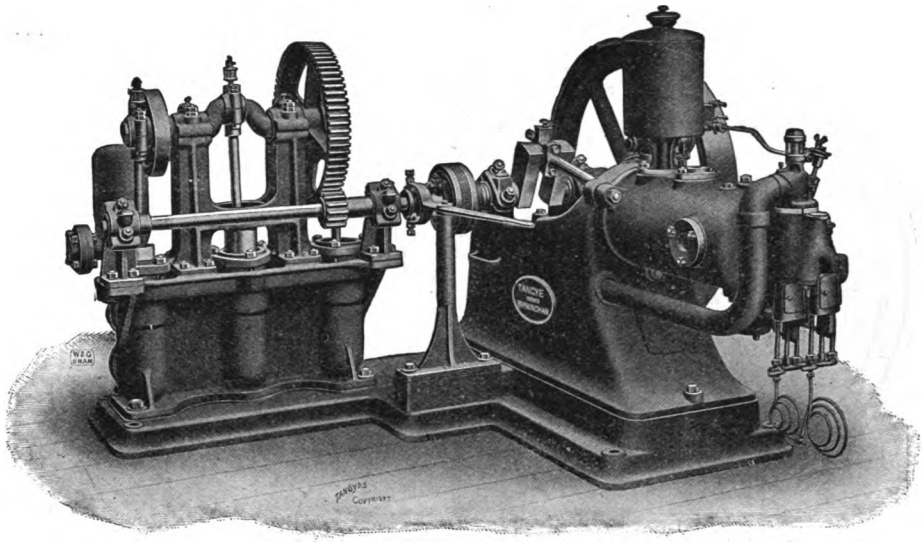

FIG. 281.—Pump built by Tangyes, Ltd., Birmingham.

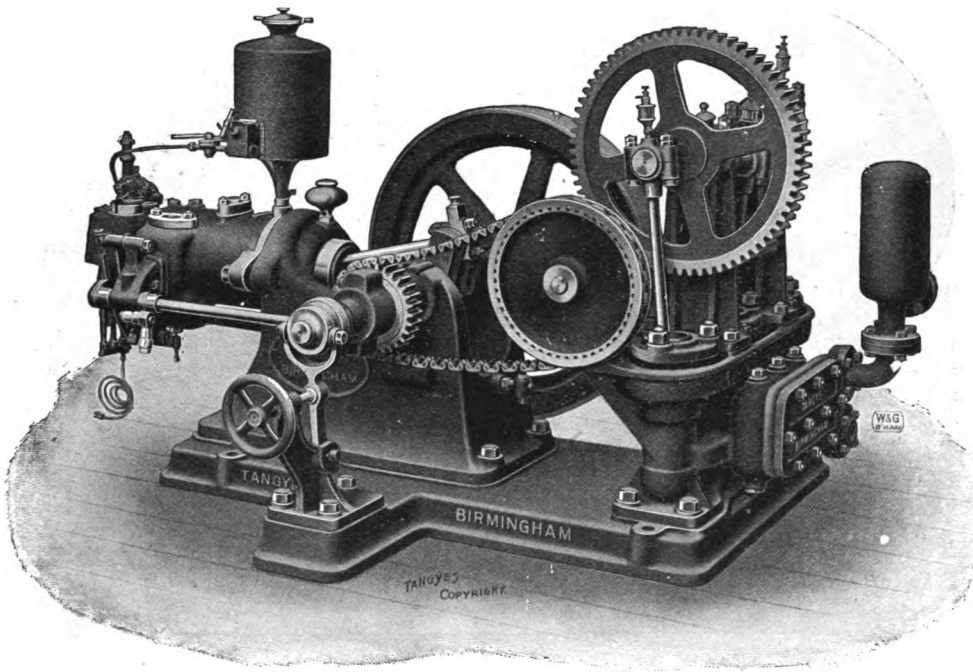

FIG. 282.—Pump built by Tangyes, Ltd., Birmingham.

Digitized by Google

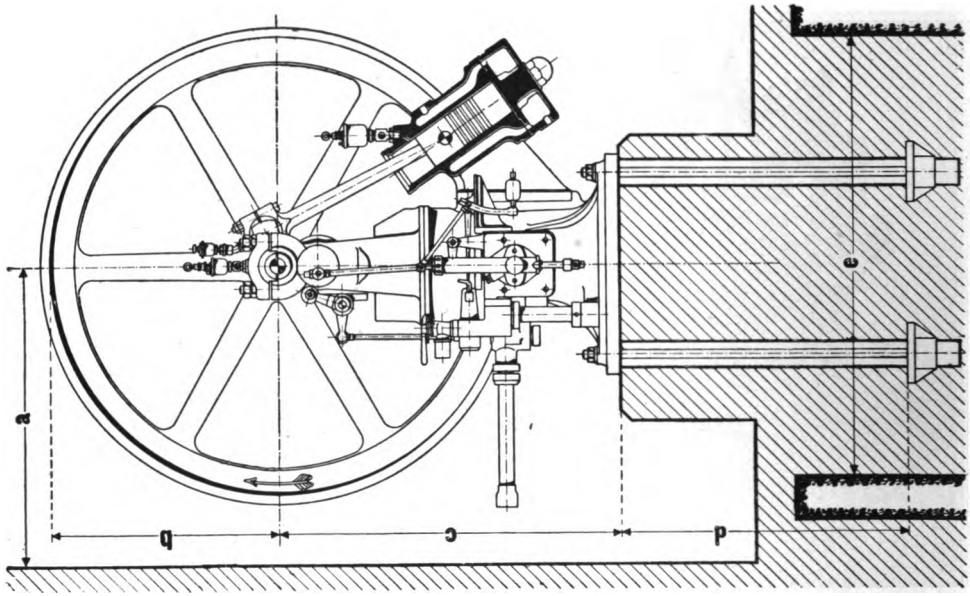

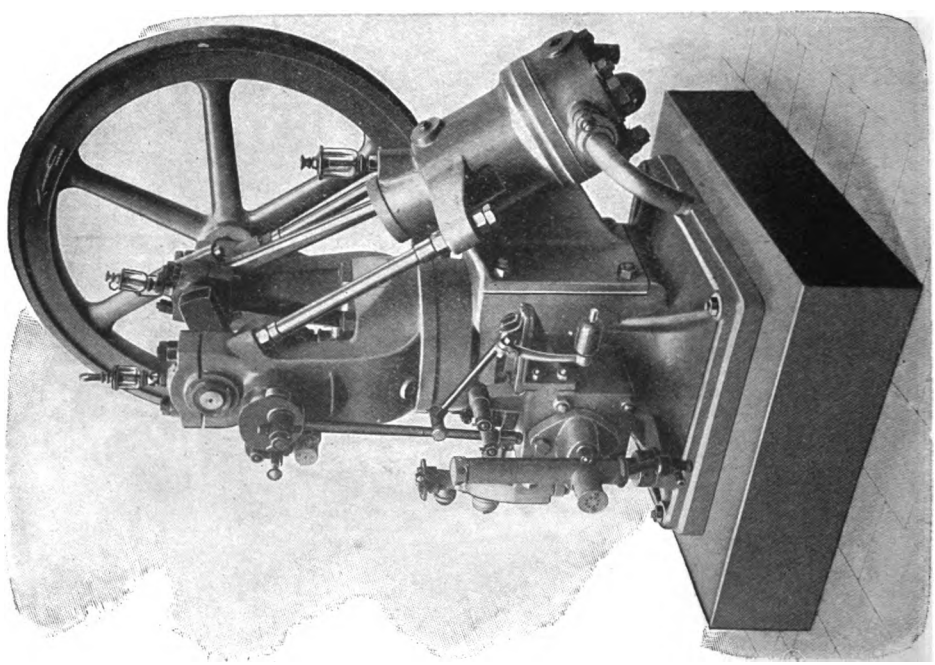

FIGS. 283 and 284.—Air compressors, built by the Gasmotorenfabrik Deutz.

Digitized by Google

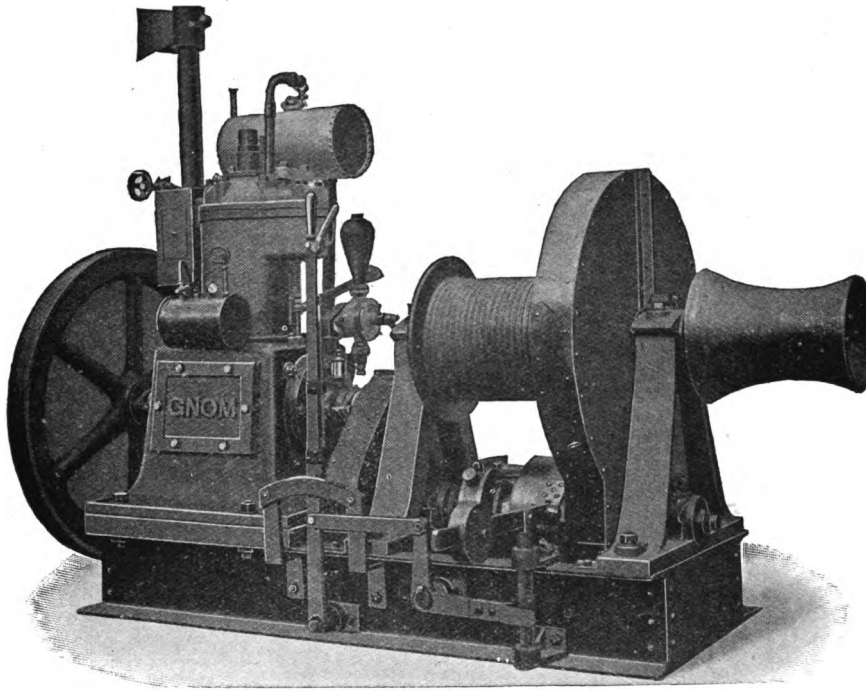

FIG. 285.—Winding winch for use on building construction, by the Motorenfabrik "Oberursel."

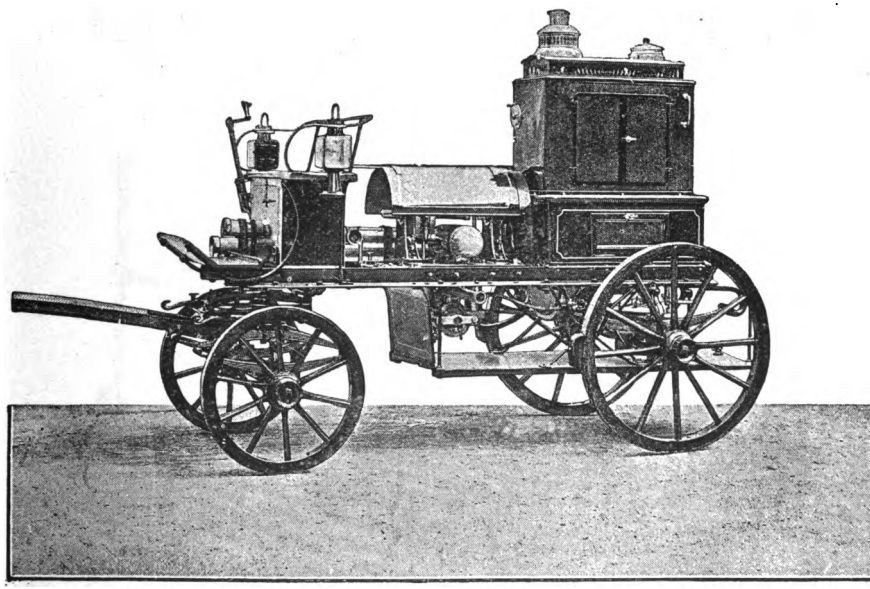

FIG. 286.—Engine-driven fire-engine, built by the Daimler-Motorengesellschaft, Untertürkheim.

Digitized by Google

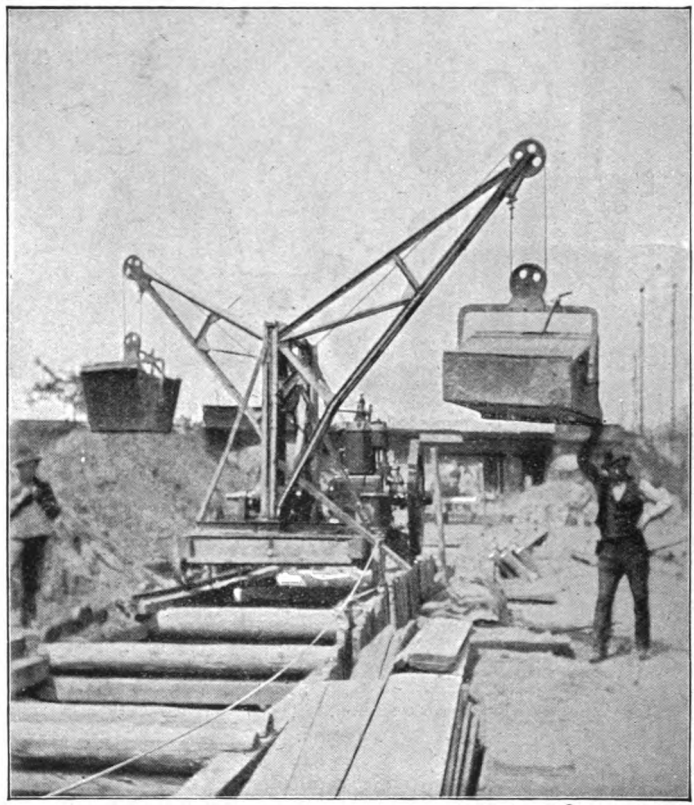

FIG. 287.—Engine-driven crane, by the Motorenfabrik "Oberursel."

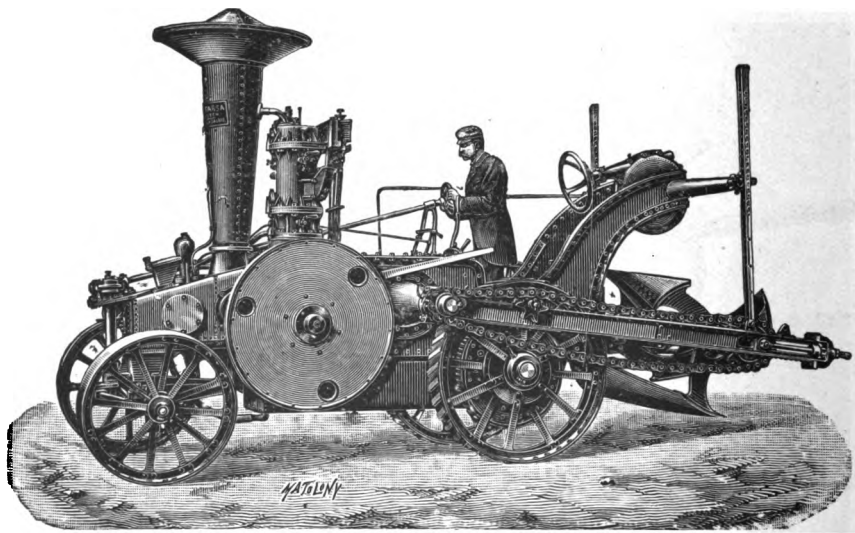

FIG. 288.—Engine-driven plough, by Ganz & Co., Budapest.

Digitized by Google

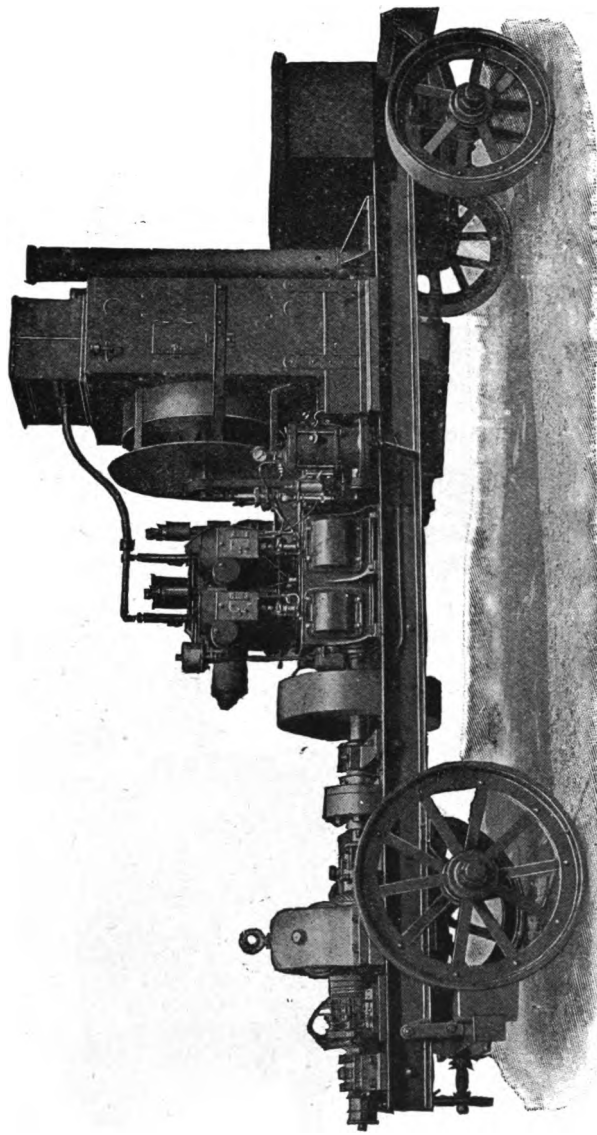

Fig. 289.—Dynamo car, motor-driven, by Bieberstein & Gödicke, Hamburg.

Digitized by Google

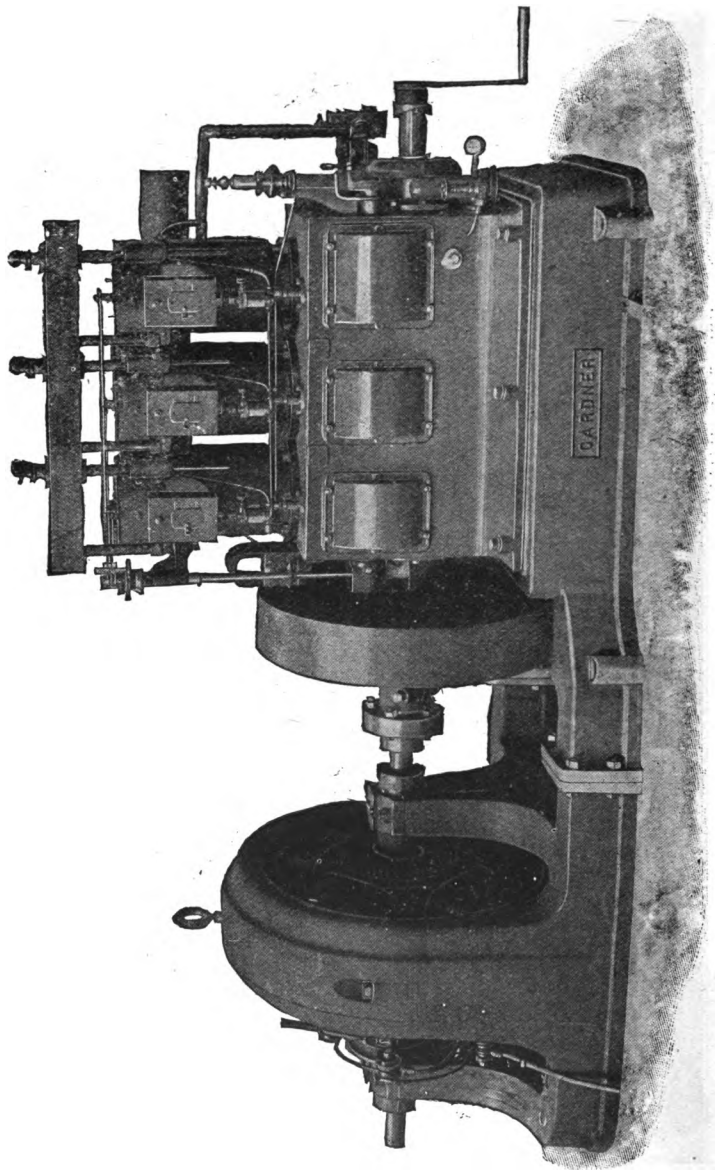

FIG. 290.—Dynamo with three-cylinder engine, by Bieberstein & Godicke, Hamburg.

Digitized by Google

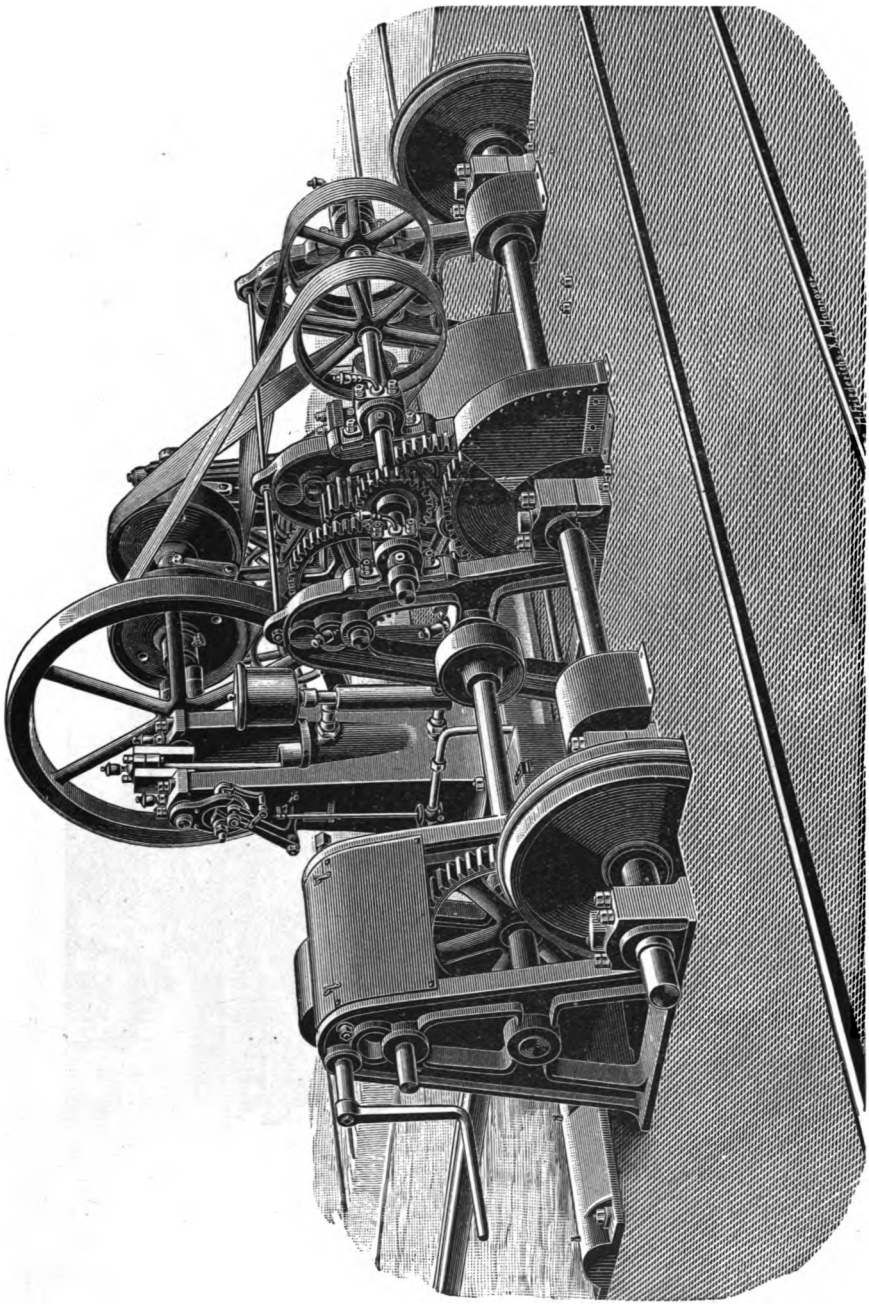

FIG. 291.—Engine-driven traverser, by Gebr. Körting, Körtingsdorf, near Hanover.

Digitized by Google

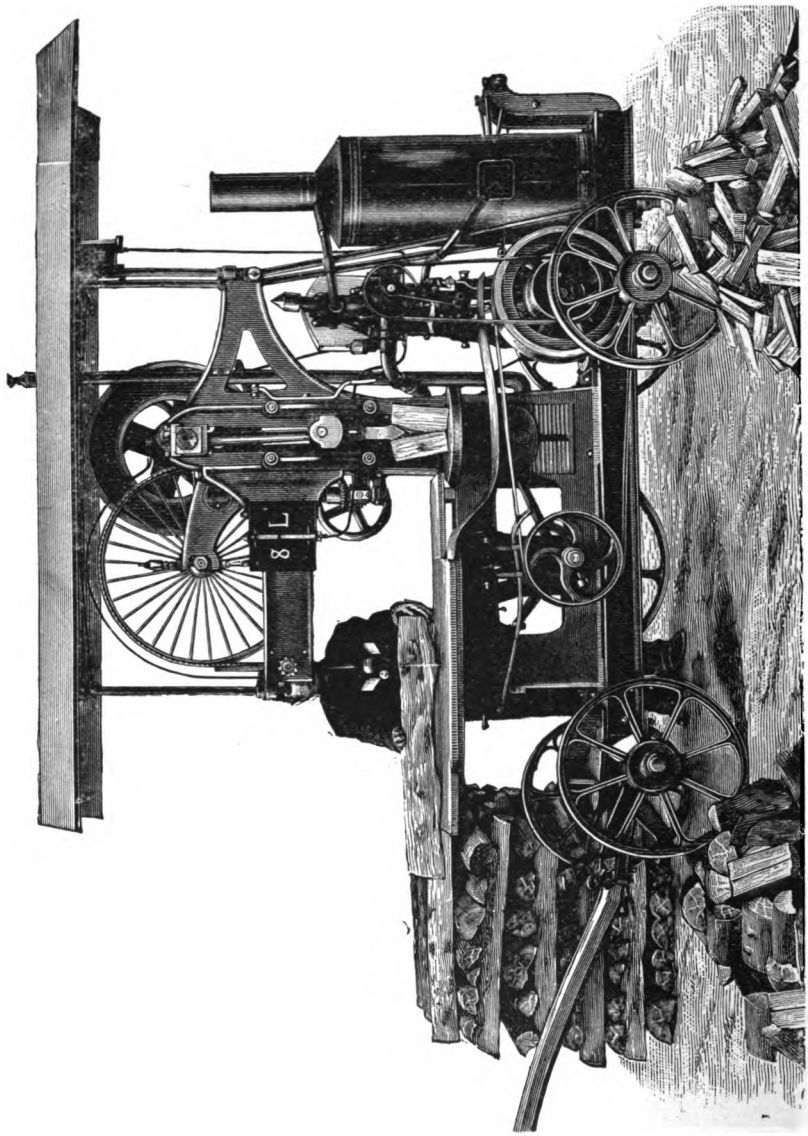

FIG. 292.—Engine-driven wood-sawing and cutting machine, built by Grob & Co., Leipzig.

Digitized by Google

CHAPTER XI.

ERECTION AND ATTENDANCE OF ENGINES DRIVEN WITH LIQUID-FUEL.

An engine may be installed within the boundaries of the German Empire without a permit from the local authorities being first obtained; in the kingdom of Saxony, however, such a permit is necessary. If the plant is to be insured against fire, certain requirements established with special reference to this matter have to be complied with; these conditions are given at the end of the present chapter.

In selecting a site for the erection of stationary engines, the following points should be taken into account:—

1. The firmness of the ground which is to carry the foundations.
2. The possibility of locating the engine in a convenient position with respect to the machinery in order to obtain a simple system of transmission or drive.
3. Facility of transport of the heavier parts of the engine to the site on which it is to be put down.
4. Accessibility all round the engine.
5. The possibility of carrying off the exhaust gases.
6. The adequate supply of cold water, or a sufficient space to allow of the erection of a cooling tower.
7. The canvassing of local opinion on such points as the noise of the engine and the smell of the exhaust gases.
8. The possibility of damage to the engine-house and the neighbouring buildings from vibration caused by the engine.

These questions are easily solved in the case of small engines; with larger engines, however, such as Diesel engines, for example, all matters dealing with the erection, and also those relating to cost, must be very carefully considered.

Firm ground for foundations.—Made ground, or ground containing a large proportion of clay, or again rubble, is not suitable for the foundations of an engine. Care must first be taken, with regard to the depth to which the foundation must be carried, that it reaches down to a really firm bottom. Attention must also be paid to the level of the ground water. The cost of

Digitized by Google

foundations may, in some instances, reach so high a figure that this reason alone may justify the selection of another site.

When the engine has to be erected otherwise than on the ground, the strength and satisfactory condition of the flooring must be properly ascertained beforehand.

Location for good transmission.—In settling on the correct place for the engine with reference to machines and drives already installed, care must be taken that the machines requiring the most power are nearest to the engine; there should be ample room for the belts so that they can be easily handled.

Transport of the heavy parts of the engine.—Facility of transport of the engine to the site it is to occupy, and for the carrying out of repairs, is of great importance; this point is often given insufficient attention, when the engine must be located either in an underground room or above ground level. It must be ascertained whether there is sufficient room all along the path over which parts of the engine will have to be carried, and whether the strength of the flooring is sufficient for the heavy parts to be taken over it. In this connection staircases and landings must be carefully examined. The carrying capacity of staircases can be much increased by stiffening the landings and covering the treads with stout planks.

The transport into and out of underground rooms is the most difficult. Great mistakes are often made in this respect even in new buildings destined to contain an engine installation, and in many cases completed partitions have to be knocked down and entrances widened in order that the larger engine parts may be taken into the site. It sometimes happens that old engines cannot be got rid of and replaced by new ones erected in their stead, because in the course of time additions have been made to the buildings which prevent the removal of the older engines from the underground room and the introduction of a newer machine.

Accessibility of the Engine.—Neither is sufficient attention given in many cases to the matter of safety in starting the engine, and to that of ease of inspection and repair. The belt-pulley is frequently so close to the wall that there is no room left for putting on or removing the belt. Or else between the rim of the flywheel and the wall there is very little space and the driver is able to make use of the wall as a fulcrum when turning round the flywheel.

In vertical engines, it happens in some instances that there is insufficient height to allow of the removal of the piston and piston-rod from the cylinder.

In cities, the matter of the exhaust piping is one of considerable difficulty, as it has to be carried up to a height greater than that of one's own and of neighbouring roofs.

The supply of cooling water and return of the water used must also be duly considered. The underground engine-rooms may be so low down that the water, after having served its purpose, cannot be easily drained away. The cost of the water must also be studied if the supply is from town

Digitized by Google

mains. Where no outflow pipes or drains are available, percolating pits must be sunk.

A most important point connected with engines constantly at work is that the neighbourhood should not be inconvenienced by the noise of the engine or the smell of the exhaust gases. The noise may be much reduced by resorting to several exhaust heads or by inserting in the piping lengths of ribbed pipe.

The vibrations which are frequently set up by the engines should not be transmitted to the walls of houses or buildings. Even when the revolving masses of the engines are balanced as perfectly as possible, complete absence of vibration is rarely attainable.

The masonry forming the engine foundation should not, under any circumstance, be directly connected to the wall of the building; neither should it touch even, but a certain amount of space should be allowed between them.

Foundations. — Internal combustion engines up to 6 h.p. can be mounted on a cast-iron base-plate secured to a concrete foundation 20 to 25 cms. (7·8 to 9·8 ins.) in thickness. When erected on the floor of a building or factory, the base-plate should be placed near the wall, and bolted to the beams of the flooring.

In erecting large engines on brick foundations, care should be taken to see that the holding bolts are not tightened before the cement grouting is quite set. When they have been tightened, the position of the engine should be carefully checked in every detail. The running hot of new engines is not by any means an inevitable evil, but is nearly always due to settling of the engine frame and bearings.

The oil used for lubrication, if allowed to run on to the masonry foundation, ends by completely impregnating the cement mortar, and converting it into a kind of thick mud, and the support of the engine is thereby endangered. Most builders remedy this by fitting trays round the engine, in which the overflow oil is collected. If no such collectors are used, sawdust must be scattered round the engine to absorb all the oil that may run out.

The drawings for the foundations should be got out before ordering the engine, in order to obtain an idea of the total cost of the installation.

Exhaust pipe.—Masonry chimneys, or rain-water pipes and waste-water pipes made of galvanised sheets, must not be used for carrying off the exhaust gases, because they cannot withstand the pressure of the exhaust, which is considerable in some circumstances. Zinc is, moreover, destroyed by the action of the exhaust gases. Zinc roofs also suffer when the gases are allowed to escape close to them. Masonry, smoke, or ventilation flues which are not used for their original purpose, can, however, be turned to account with advantage for the accommodation of wrought- or cast-iron exhaust pipes. Thick cast-iron pipes are always preferable to the thinner wrought-iron ones, as they are far less quickly damaged by the action of the gases than is the case with the latter.

Where there are long horizontal lengths of piping, these should end in a

Digitized by Google

very steep length, so as to prevent the gases from carrying off with them the water that forms in the pipes, which would be liable to cause damage to the roofs and rain-water guttering.

When the exhaust pipes are led through wooden floors, or are fixed to

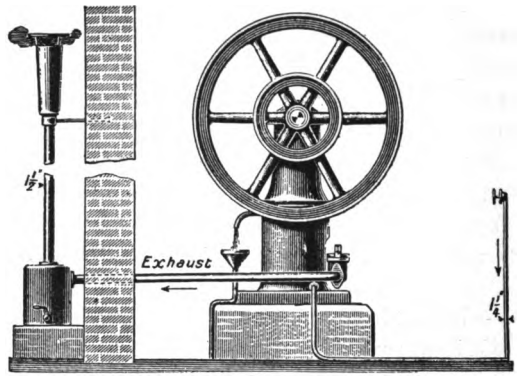

FIG. 293.—Cooling with water under pressure and exhaust pipe for a small vertical engine

wooden partitions, they should be insulated with fire-proof material at all points that may become heated.

Air-supply pipes.—Long air-supply pipes reduce the power of the engine, and should only be used where air free from dust is required; the air, moreover, should be cool and dry. The air piping should be of sufficiently large diameter to prevent any excessive air resistance; no thin sheets should be

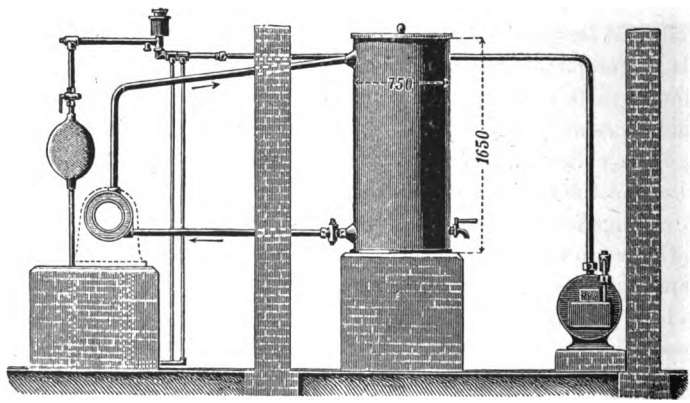

FIG. 294.—Arrangement of cooling tank with a 2 h.-p. engine.

used in its manufacture, as the pressure on the inside may rise momentarily, at times to 2 or 3 atms. (29·4 or 44 lbs. per sq. in.) in case of back fire.

Cooling.—The most simple method of cooling, and that most generally used for stationary engines, is that by water under pressure. The water is delivered at the lower part of the water jacket, and on becoming heated up to 50° or 60° (112° or 140° Fahr.), is allowed to flow out freely in a funnel, so

Digitized by Google

that the rate of circulation of the cooling water and the temperature are easily ascertained. Fig. 293 shows a cooling device of this kind.

This method of cooling presupposes the existence of a drain through which the hot water may be led away. Water consumption for this purpose may be estimated at from 30 to 40 litres (6·6 to 8·8 gallons) per horse-power-hour. With large engines, the quantity of cooling water required is considerable, and it is advisable in these cases to have a well, with water supply provided by a pump driven from the engine. Where water is scarce, cooling towers or

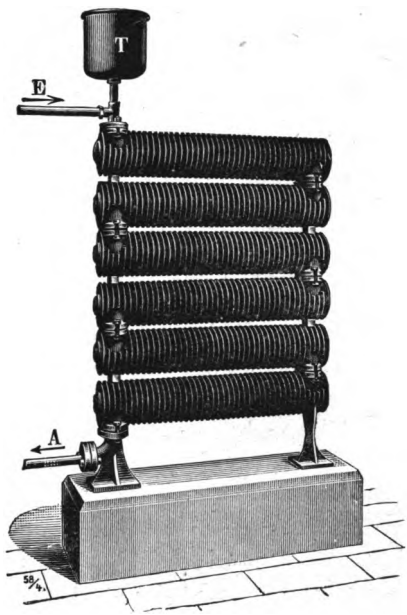

FIG. 295.—The Körting radiator.

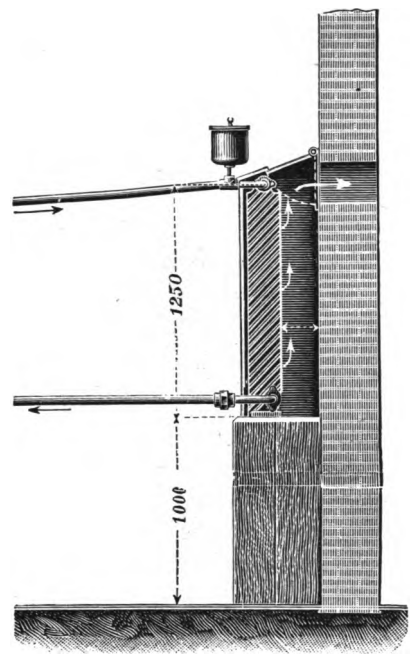

FIG. 296.—Radiator with device for heating or ventilating.

cooling ponds must be provided in the same way as with some steam-engine installations.

With small stationary engines, up to about 8 h.-p., instead of the cooling arrangement just described, the cooling tank system is found advantageous.

The cooling tank is usually of galvanised iron, and its capacity is so proportioned that the quantity of water it contains, omitting to take into account the effect of radiation, becomes heated up to 50° or 60° (112° or 140° Fahr.) in 10 hours. Taking 40 litres (8·8 gallons) of water heated per horse-power-hour, the capacity of a tank for, say, a 2 h.-p. engine will be $40 \times 2 \times 10 = 800$ litres (177·7 gallons). Whenever possible, the tank should not be in the same room as the engine, but exposed to currents of air, so that the water shall be cooled during the night; it should not, however, be directly exposed to the cold in winter. On hot summer days, it may happen that the

Digitized by Google

temperature of the whole quantity of water becomes raised to the boiling point, when a certain quantity should be drawn off and replaced by cold water. The attendant should always be careful to see that the water level is always above the upper pipe opening.

The engine being lower than the tank, the water becomes heated by circulating round the engine, and is delivered from the water-jacket to the upper part of the tank, cold water flowing from the tank in equal volume to the lower part of the water-jacket. Circulation on this principle can only work properly when the upper connecting pipe is of sufficient diameter, given sufficient rise and without sharp bends.

The cooling water-tank occupies a good deal of room, is of considerable weight, and does not produce a constant temperature throughout the time the engine is running. Radiators are more satisfactory in this respect; they are,

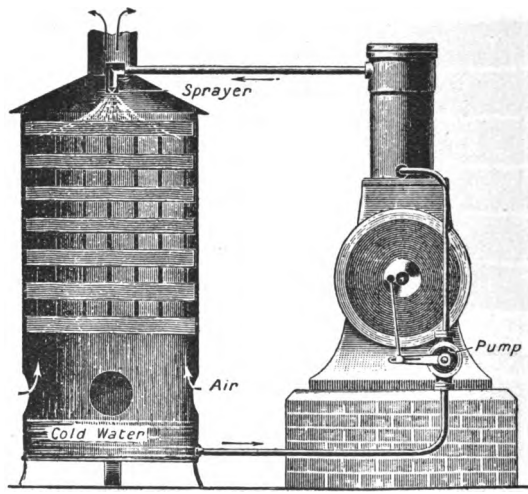

FIG. 297.—Air cooler.

however, much more expensive in first cost, but they keep the temperature of the engine constant and require but a small quantity of water. The space they occupy is also very small.

Circulation of the water takes place in the same way as with the tank installation, but its cooling is greatly accelerated by the very large radiating surface of the ribs; the circulation is also much more rapid, and a much smaller quantity of water suffices. The larger the piping and the higher the radiator is placed above the engine, the more rapid is the cooling effect. As the water by heating increases considerably in volume, the radiator must not be closed up, but must be provided as shown in fig. 295, with an expansion tank.

When the radiator is placed as shown in fig. 296, the heat which radiates from it may be used in winter for heating a room, and in summer for ventilating purposes. In winter, the opening in the wall is closed by a flap as shown in dotted lines; it is kept open in summer.

Digitized by Google

With portable engines, the water-cooling is also carried out on the system adopted in the cooling towers used in connection with steam engines,

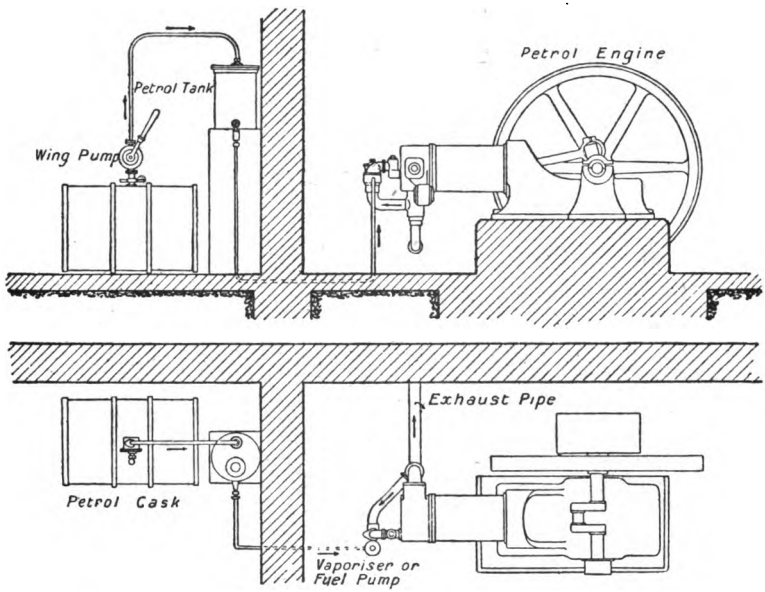

FIG. 298.—Installation consisting of a small engine using petrol, benzol, or paraffin.

and is called an air-cooling plant. As seen in fig. 297, the cold water supplied by a pump is sent through the water-jacket and sprayed by means of a rose in the upper part of a cooling tank, whence it flows down drop by drop over a number of wooden laths. A current of air flows up the tank, and cools the

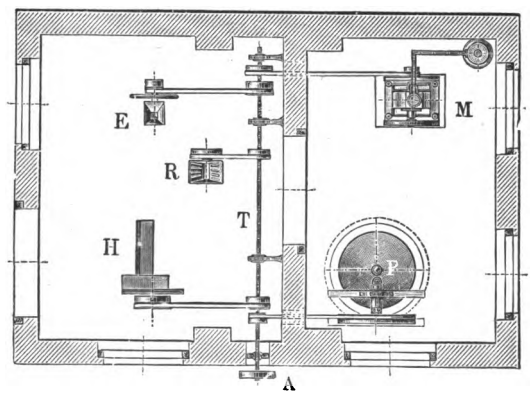

FIG. 299.—Engine installation for agricultural purposes.

water as it falls. The cooled water collects at the bottom of the tank, and is pumped through the water-jacket again.

The adjoining illustrations show various installations. Fig. 298 is a

Digitized by Google

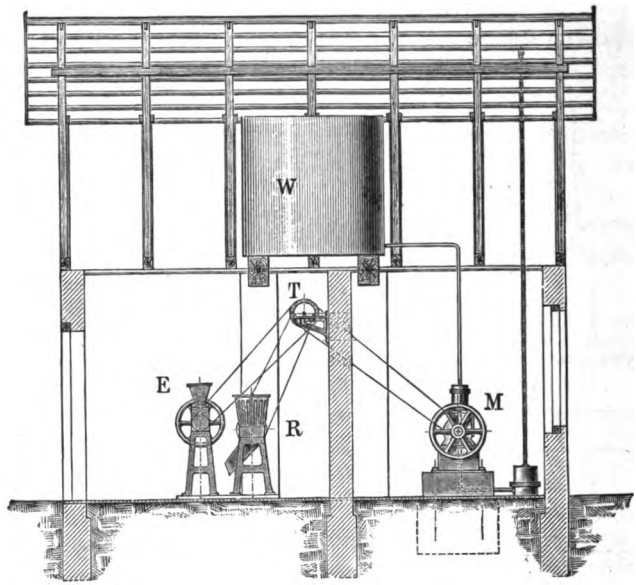

FIG. 300.

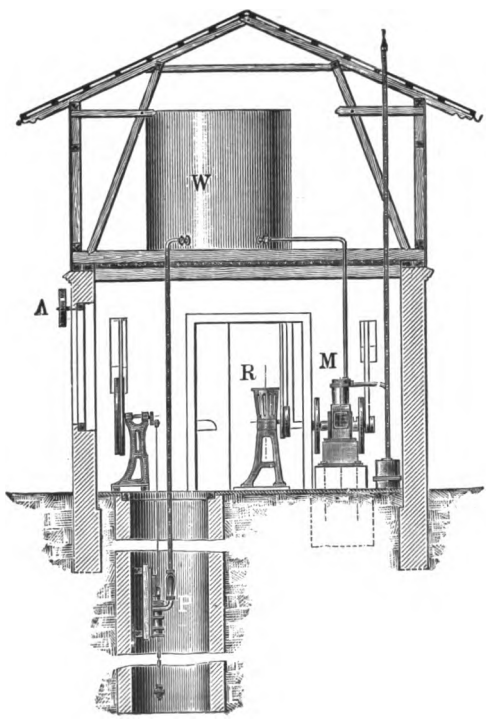

FIGS. 300 and 301.—Engine installation for agricultural purposes.

M, 2 h.-p. engine.
T, Line shafting.
E, Coarse grinding mill.
R, Maize husking machine.
H, Chaff cutter (fig. 299).
P, Water pump in well.
W, Water tank.
A, Belt pulley for various purposes.

Digitized by Google

general view of a stationary plant with a small engine using petrol, benzol, or paraffin, showing also the location of the fuel-tank.

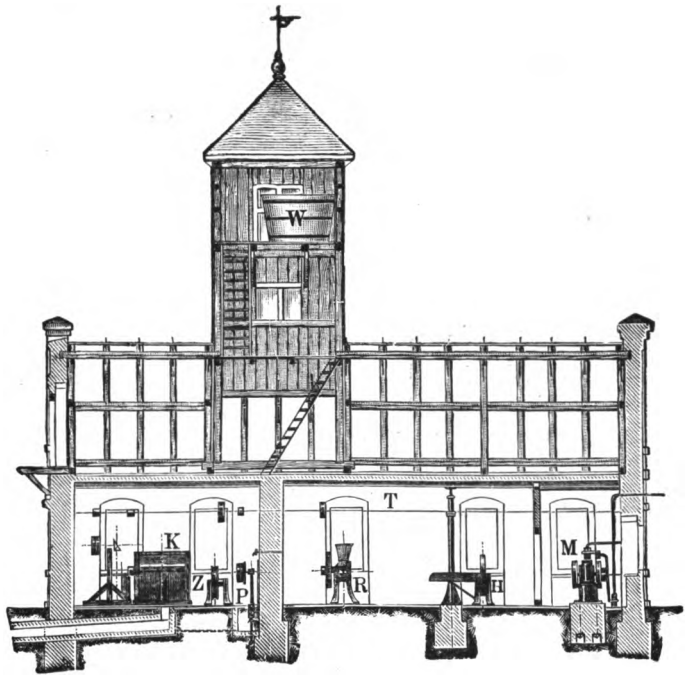

FIG. 302.

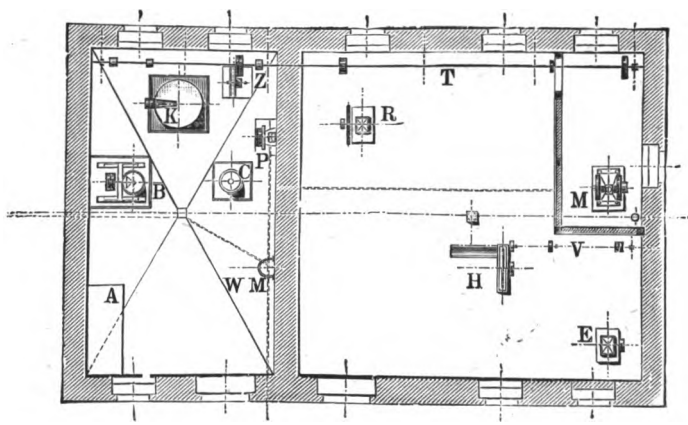

FIGS. 302 and 303.—Mechanically worked dairy and agricultural installation.
(For references see next page.)

Figs. 299 to 301 show installations for agricultural purposes as built by Ganz & Co., Budapest. Figs. 302 to 305 illustrate a mechanically worked dairy, and fig. 306 a motor-driven roll mill.

Digitized by Google

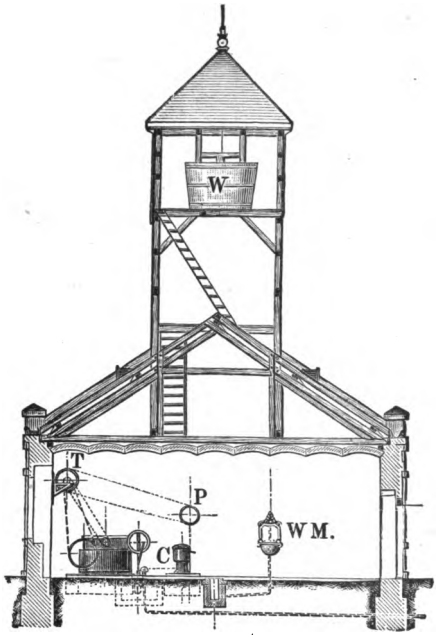

Figs. 302 to 305.

M, 2 h.-p. engine; T, Line shafting; E, Coarse grinding mill; H, Chaff cutter; R, Maize husking machine; P, Water pump; C, Centrifugal separator; Z, Pulley for belt drive for same; B K, Butter-making machines; W, Water tank; W M, Water tap.

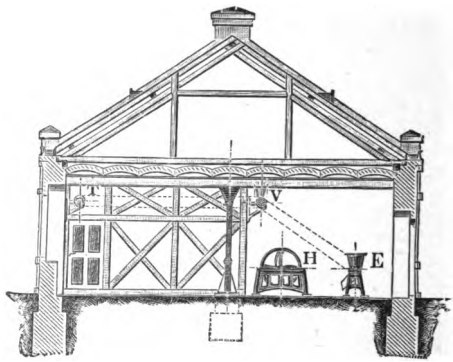

FIGS. 304 and 305.—Mechanically worked dairy and agricultural installation.

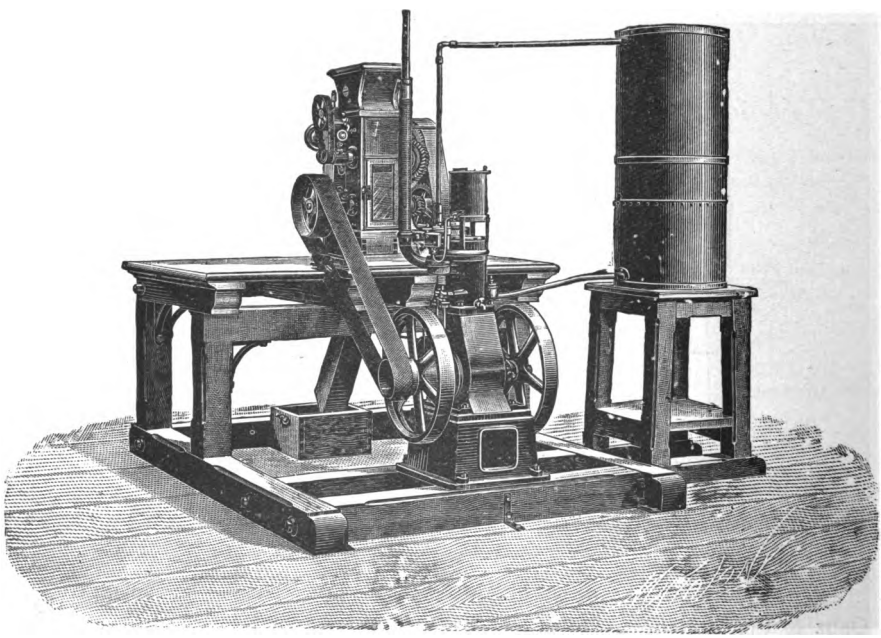

FIG. 306.—Roll mill driven by a 3 h.-p. engine.

Digitized by Google

Conditions in force from 1st August 1906, relating to the Installation of Stationary Engines, using for fuel Petrol, Ligroine, Gasoline, Naphtha, or other liquid hydrocarbons whose flash-point is below that of the best refined paraffin.

A.—Engines whose gas producer or vaporiser is installed in a separate room.—1. The engine must only be laid down in rooms in which no easily inflammable articles or materials are stored or manufactured, and must be erected on a fireproof foundation. Where the foundation does not extend for at least 30 cms. (12 ins.) round the engine on all sides, the flooring, if made of wood, must be covered over with iron sheeting for the remainder of this distance all round. No woodwork or inflammable material must be nearer than 1 m. (39·37 ins.) from the top, and 30 cms. (12 ins.) from the sides of the engine.

An engine must be at a distance of at least 1 m. (39·37 ins.) from any heated oven or heated pipes.

2. The gas producer or vaporiser must be put down in a strongly built room which is put to no other use. The room must be well ventilated, have a fireproof floor and a strong ceiling, or one protected with fireproof material and without any opening; it should be heated with water or steam only. Openings for driving shafts, rope or belt drives, and doorways, or window openings into adjoining rooms, are only to be allowed when in the latter rooms there is no easily inflammable material stored or in course of manufacture. The door openings are to be provided with iron or iron-covered doors; the windows are to be made with wired glass. The above limitation as to the passage of the driving shaft is not applicable when the passage only affords the necessary opening for the shaft.

3. When artificial lighting is resorted to in the gas-producer room, this must only be done by electric incandescent lamps, Davy safety-lamps, or by outside lamps partitioned off from the room by thick glass panes fitted so as to be air- or gas-tight.

4. The filling of the gas-producer or vaporiser must only be done from an iron tank placed inside the gas-producer room or in the open, and through closed-in pipes, using a rotary pump, or by using portable explosion-proof tanks.

The stock of hydrocarbon must not exceed 500 kgs. (10 cwts.), and must be kept in wrought-iron tanks, in separate, fireproof, and well-ventilated rooms, which are not to be artificially lighted at all, or, if lighted, the provisions given under (3) must be followed; or else in the open, in a pit sunk in the ground, lined with masonry and provided with an iron cover.

5. The exhaust pipe leading from the engine must be made fireproof.

B.—Engines with their gas-producer or vaporiser in the same room.—1. The engine, and the producer with which it is connected, must be laid down in a room used for no other purpose. This room must be built with

Digitized by Google

thick walls, fireproof floor, and a strong ceiling, or one protected with fireproof material and without any openings. Openings for shafts, rope or belt drives, and doorways and window openings into adjoining rooms, are only to be allowed when in the latter room there is no easily inflammable material stored or in course of manufacture. The door openings are to be provided with iron or iron-covered doors; the windows are to be made with wired glass. The above limitation as to the passage of the driving shaft is not applicable when the passage only affords the necessary opening for the shaft.

2. When artificial lighting is resorted to in the room containing the producer and engine, this must only be done by electric incandescent lamps, Davy safety-lamps, or by outside lamps partitioned off from the room by thick glass panes fitted so as to be air- or gas-tight.

3. Ignition may only be performed by electric current or air compression, and without heating lamps.

4. The filling of the producer must only be done from an iron tank placed in the engine-room, and through closed-in pipes, using a rotary pump, or by using portable explosion-proof tanks.

The stock of hydrocarbon must not exceed 500 kgs. (10 cwts.), and must be kept in wrought-iron tanks placed in separate, fireproof, and well-ventilated rooms, which are not to be artificially lighted at all, or, if lighted, the provision given under (2) must be followed; or else in the open in a pit sunk in the ground lined with masonry and covered with an iron cover.

5. The exhaust pipe leading from the engine must be made fireproof.

C. Engines without gas-producer or vaporiser.—1. The engine must only be put down in a room in which no easily inflammable material is stored or manufactured, and must be erected on a fireproof foundation. If the foundation does not extend for at least 30 cms. (12 ins.) round the engine on all sides, the flooring, if made of wood, must be covered with iron sheeting to that distance. No woodwork and inflammable material must be nearer than 1 m. (39·37 ins.) from the top, and 30 cms. (12 ins.) from the sides of the engine.

2. If a heating lamp is used for starting the engine, the engine-room is only to contain sufficient fuel for this lamp for the day's run, stored in an explosion-proof tank.

3. The fuel-tank, which supplies directly to the engine the necessary hydrocarbon for its working, is to be made of iron, and must be placed outside the engine-room in the open air, or in a separate well-ventilated room, heated by steam or hot water, and lighted only by incandescent lamps, Davy safety-lamps, or by an outside light partitioned off from the room by thick, gas-tight-fitting glass panes. This room must have thick walls, a fireproof flooring, and a strong ceiling, or one covered with fireproof material and without any openings. Openings for driving shafts, ropes, or belt drives, and doorways or window openings into adjoining rooms, are only allowed when in the latter rooms there is no easily inflammable material stored or in course of manufacture. The door openings are to be provided with iron or

Digitized by Google

iron-covered doors; the windows are to be made with wired glass. The above limitation as to the passage of the driving shaft is not applicable when the passage only affords the necessary opening for the shaft. If the engine is fitted with electric or compression ignition, and is started up without the use of a heating lamp, the fuel-tank may be placed in the engine-room provided this meets the conditions set forth for rooms containing fuel-tanks.

4. The filling of the fuel-tank must only be done from an iron tank kept in the fuel-tank room or in the open, through closed-in pipes, using a rotary pump, or by using portable explosion-proof tanks.

The stock of hydrocarbon must not exceed 500 kgs. (10 cwts.), and must be kept in wrought-iron vessels, in separate, fireproof, and well-ventilated rooms, which are not to be artificially lighted at all, or, if lighted, the provisions given under (3) are to be followed; or else in the open, in a pit sunk in the ground, lined with masonry and provided with an iron cover.

5. The exhaust pipe leading from the engine must be made fireproof, and mounted at a safe distance from the fuel-supply pipe.

Conditions for Alcohol Engines.

1. The engines must not be put down in buildings containing corn, straw, or other easily inflammable material, or run in close proximity to hayricks or sheds containing haystacks; when working, they must be at a distance of at least 1 m. (about 1 yd.) from the latter, or at least at a distance of 3 ms. (about 3 yds.) from corn, straw, or other easily inflammable material.

2. They should be worked with commercial alcohol containing a maximum of 90 per cent. pure alcohol. An addition of 20 per cent of benzol is allowed.

3. When using an addition of benzol, the process of mixing must be done in daylight only, in the open, or in a room with fireproof flooring; in both cases, at a safe distance from all combustible material.

4. When using petrol or benzol for starting the engine, electric ignition only must be used; no carburettor heated in any manner whatever is allowed. The use of tube ignition is permissible provided that the heating flame for it is surrounded by a sheet-metal covering, in which all openings must be covered with well-fitting wire gauze screens.

5. Alcohol and petrol tanks must be so far removed from the heated parts of the engine, that no noticeable heating of the tanks occur. The receiver on the engine containing the petrol for starting should not have a capacity of more than 1½ litre (2·65 pints), and must be covered with a self-cleansing tight-fitting metal cover.

6. The fuel-tanks may only be filled by daylight. The alcohol tank may only be filled by using a rotary pump; for filling the petrol tank an explosion-proof vessel is to be used.

7. No stock of fuel for supplementing the supply of alcohol in the tank is to be kept in proximity to the engine; the stock is only to be replenished

Digitized by Google

when it has become exhausted. During replenishing of the supply of fuel the engine must be stopped running.

8. The stock of benzol or petrol must not exceed 250 kgs. (5 cwts.), and must be kept in iron vessels, stored in a separate fireproof room, which must never be entered with a light; or in a pit sunk in the open, lined with walls, provided with an iron cover, and at a distance of at least 10 ms. (about 10 yds.) from buildings or inflammable material. When the stock of petrol or benzol together does not exceed 20 kgs. (44 lbs.), it may be kept in vessels made of other metal.

Conditions for Stationary Alcohol Engines.

1. The engine may only be installed in a room in which no easily combustible material is stored or in process of manufacture, and only on a fireproof foundation. When the foundation does not extend for at least 30 cms. (12 ins.) round the engines on all sides, the flooring, if made of wood, must be covered with iron sheeting to make up that distance. No woodwork and inflammable material must be nearer than 1 m. (39·37 ins.) from the top of the engine, and 30 cms. (12 ins.) from the sides.

2. The engine and the tanks containing the fuel must be at a distance of at least 2 ms. (about 2 yds.) from heated ovens or pipes, and from all lighting lamps (electric incandescent lamps excepted).

3. The exhaust pipe leading from the engine must be rendered fireproof.

4. The engine may only be supplied with commercial alcohol containing at most 90 per cent. pure alcohol. An addition of 20 per cent. benzol is allowed.

5. The vessels from which fuel is supplied to the engine through closed pipes must not be brought over the engine, but must be kept to the side at a distance of at least 1 m. (about 1 yd.).

6. The mixture of the fuel and the filling of the fuel vessels must only take place in daylight; in case of need this can also be carried out by artificial light if the conditions under (2) be fulfilled.

7. The stock of petrol and benzol must not exceed together 250 kgs. (5 cwts.), and must be kept in wrought-iron vessels, stored in a separate fireproof room, which is not to be entered with a light, or in a pit sunk in the open, lined with walls, provided with an iron cover, at a distance of at least 10 ms. (over 10 yds.) from buildings and material liable to catch fire. When the stock of petrol and benzol together does not exceed 20 kgs. (44 lbs.), it may be kept in vessels made of another metal.

Conditions relating to Stationary Engines using Paraffin or Liquid Hydrocarbons whose flash-point is above that of the richest Paraffin.

1. The engine must only be supplied with the richest paraffin, or with a fuel whose flash-point is above that of the richest paraffin.

2. The engine may only be laid down in a room in which there are no easily inflammable materials stored or in course of manufacture, and only on

Digitized by Google

a fireproof foundation. If the foundation does not extend for at least 30 cms. (12 ins.) all round the base of the engine, the flooring, if of wood, is to be covered over the remaining distance with iron sheeting. No woodwork and inflammable material must be nearer than 1 m. (39·37 ins.) from the top of the engine, 30 cms. (12 ins.) from the sides.

3. The engine and fuel-tanks must be at a distance of at least 1 m. (39·37 ins.) from heated ovens or pipes.

4. The exhaust pipe leading from the engine must be rendered fireproof.

5. The stock of fuel must not exceed 500 kgs. (10 cwts.), and must be kept in a room which is not to be entered with a naked light, or in the open at a distance of at least 10 ms. (over 10 yds.) from buildings.

Attendance of Engines.

The hand levers for starting and stopping the engine should always be placed in the same positions; by practice, the attendant soon gets to operate these mechanically.

Instructions for starting.

It is necessary

1. To light the heating lamp if one is used.

2. To fill the oil-cups and lubricators always in the same order, and to watch the action of the sight-feed lubricators.[1]

3. To apply paraffin to the exhaust valve spindle and to the ignition interrupter lever spindle. To ascertain that the exhaust valve and the ignition interrupter lever work freely.

4. To throw into gear the compression relief arrangement and to retard the ignition.

5. To open the fuel feed-cock to the usual mark required for starting.

6. To turn the flywheel with the hand-crank or barring-gear. In large engines, the starting-gear must be set in motion.

7. As soon as ignition occurs regularly, and the engine has acquired a certain amount of speed, to set in operation compression, to regulate for early ignition, and to place the fuel supply-valve in the running position.

8. To start the cooling water supply.

9. To shift the transmission belt on to the driving pulley.

Attendance when running.

1. To ascertain the cooling water temperature.

2. To observe the working of the lubricators.

3. To regulate the fuel supply.

4. In winter to repeatedly drain off the water from the exhaust pipe.

[1] In cold weather, the lubricating oil may become so thick that it only flows slowly from the oil-can, and the lubricators may not act efficiently as long as the engine remains cold. The oil-cans should in such cases be warmed, so that the lubricators may be filled with a more liquid lubricant.

Digitized by Google

For stopping the engine.

1. To remove the belt.

2. To cut off the fuel supply; put out the heating flame and open the oil drain-cock on the combustion chamber.

3. To stop lubrication.

4. To stop the working piston at the end of the outward stroke, the gear leaving the exhaust valve open.

5. Cut off the cooling water after complete cooling down of the engine. (By this means the deposit of scale is prevented; scale is due mainly to the water cooling down in the engine and being heated up again.)

6. Draining the water off from the exhaust pipe.

7. Should frosty weather be anticipated, the water must be emptied out of all cooling jackets, also out of the ribbed radiators.

Cleaning of the engine.

The engine should be cleaned on the outside every evening immediately on stopping, and while it is still warm. All polished and varnished parts should be rubbed down with soft clean waste.

Internal cleaning should include the valve chest, valves, exhaust passages, exhaust piping, combustion chamber, piston and rings, and cylinder walls. The time for internal cleaning cannot be prescribed, as this cleaning depends upon the type of engine and the care with which it is worked. Under normal conditions, it may be taken that stationary engines working with petrol or benzol for ten hours a day, require to have their valves and electric ignition device seen to about every eight weeks. With paraffin engines working with vaporisers, internal cleaning should be done more often. Diesel engines require less frequent cleaning.

If the valve heads become covered with oil, this should be removed, and at the same time, the valve spindles, the parts operating the electric ignition, and the inside of the valve chests, should also be cleaned. The carbonised oil is removed with iron or copper scrapers.

Seeing that the greater part of the lubricating oil supplied to the cylinder is carried out through the exhaust valve in the form of oil vapour or oil spray with the exhaust gases, it is clear that lubrication must not be carried to excess. In paraffin engines working with a vaporiser, a large quantity of unconsumed paraffin finds its way through the exhaust valve. In all such cases, therefore, one must expect the opening in the exhaust valve, exhaust head, and exhaust pipe, to become quickly narrower, even to the extent of being stopped up, and frequent—often weekly—cleaning is necessary. Such conditions, of course, arise from bad workmanship and neglect in attendance. In these cases the power is reduced and the consumption of fuel increased.

Among the most important duties of the driver is the maintenance of the valves in good working condition. The development of the full power of the engine, its economical running and easy starting, depend mainly upon the

Digitized by Google

valves remaining tight. The valve chests must therefore be easily opened and the valves easily removed. Foreign bodies of all kinds—sand, dust, filings, etc.—carried in with the air for combustion, are liable to become attached to the valve faces. The excessively hot combustion gases which flow through the exhaust valve port, lead to the formation of scale; the oil residues also, already referred to, may cause both valves to work badly. The inlet valve suffers less by heat, the regular inflow of cool air for the charge forming a most efficient method of cooling.

It is important that the air for the charge should be drawn from a certain height above the floor level and from a place where there is no dust; it is a very unwise arrangement to have the air-suction orifice on the floor level. In automobiles, the air should be drawn from the place the least exposed to dust.

Foreign bodies which become attached to the valve faces should be removed with care, and the valve heads and spindles cleaned of coomb by using paraffin. Valves that are not tight are ground in with medium fine emery; valves made of brass or copper, occasionally used in internal combustion engines, are ground in with glass powder.

In engines which receive good attention, the combustion chamber and piston rarely require cleaning. So long as the piston rings are free, they need not be removed. The ring lying nearest to the combustion chamber will be found to become fixed only after a comparatively long period of working; when this occurs all the rings should be removed and cleaned thoroughly, the grooves being also thoroughly cleaned out at the same time. The removal and replacing of the rings and of the piston must be carried out with great care. The rings which become tight may be loosened by using paraffin; it is advisable to steep the whole piston in paraffin, after which the rings will be easily moved if struck with a wooden mallet.

For facilitating the replacing of the cleaned piston, a piston-clamp is generally used, supplied by the engine-builder.

All parts which are removed from the engine and cleaned, should be deposited in a clean place where they are not likely to be damaged. When removed, the connecting rods should not be left leaning against a wall, for in such a position sand and dust can easily find its way to the bearings. When for any reason the lay-shaft has to be removed, care must be taken in replacing it that the teeth of the pinions mesh together in exactly the same manner as before, or else the valves will not work well.

When the engine is re-erected, and all the nuts and bolts have been properly tightened up, it is turned round in the reverse direction in order to test it for tightness, and then set running. It is tested for power by means of a brake on the flywheel and a lever; small engines are tested for power with a pad of cleaning waste as a brake. After a run of a few minutes, the bearings are examined in order to ascertain whether they are running hot or not.

Digitized by Google

CHAPTER XII.

ON CORRECTING IRREGULARITIES IN RUNNING. DANGERS, AND PRECAUTIONS TO BE TAKEN, IN CONNECTION WITH THE USE OF INTERNAL COMBUSTION ENGINES.

ONE of the essential qualities of a really capable engine attendant or chauffeur is the ability of finding out quickly any cause of irregular working of his engine, and to make it good expeditiously. In this respect, internal combustion engines present greater difficulties than steam engines. An internal combustion engine supplies itself with fuel and air for combustion in the quantities required for the work it has to perform. It has no reserve of power on which it can draw, in the same way as a steam engine can draw on its boiler. A small amount of leakage in a steam engine does not give rise to trouble in running, but in internal combustion engines leakage forms the main cause of such troubles. Moreover, the fuel vapours and air with which one has to deal in these engines, are both invisible, and this renders it necessary to have recourse to indirect ways and means in seeking for the cause of leakage, this being traced by following up the effects it has produced.

In finding out the cause of any irregularity in running, one must proceed methodically. By haphazard tests no clear opinion is possible as to the most satisfactory measure to adopt, and the real source of the evil. The following are a few directions for tracing the principal causes of troubles that may occur, together with the means of remedying them.

The troubles that occur mostly in internal combustion engines are:—

1. The engine refuses to start, and explosions occur in the exhaust pipe.
2. It refuses to start, without the occurrence of accompanying explosions.
3. It starts running, but stops after a few ignitions.
4. It can be started running, but each time only after a number of idle revolutions.
5. Running is irregular.
6. The engine refuses to run after it has been working for some time.
7. The power developed is too small.
8. Explosions occur in the air-pipe while drawing in the charge.
9. Knocking occurs.
10. The engine runs at too high a speed.

Digitized by Google

1. The Engine refuses to start, and Explosions occur in the Exhaust Pipe.

Cause of the trouble.—The exhaust valve spindle fits too tightly in its guide, or the valve is not tight.

Remedy.—(*a.*) To pour paraffin in the small tube provided for the purpose in the valve spindle guide, and to work the valve up and down. Oil must not be used for lubricating the valve spindle, as the result would be the reverse of what is wanted, for the oil would carbonise at the high temperature of the spindle, thus preventing it from working; paraffin, on the other hand, evaporates without leaving a deposit.

(*b.*) Should easing the exhaust valve not meet the case, then it must be removed and its seat cleaned of any foreign substance that may have become attached to it. Eventually it may be necessary to grind the valves in.

Explanation.—When the valve does not work freely in its guide, or when foreign substances prevent it from closing down tight, a part of the unconsumed charge enters the exhaust head and exhaust pipe during the compression period. On ignition, the portion of the charge in question becomes ignited also inside the exhaust head and exhaust pipe through the opening left by the exhaust valve, the gases of combustion being driven through the exhaust pipe with a more or less loud explosion; the pressure is not exerted on the piston, and the engine cannot start.

2. The Engine refuses to start, without the occurrence of accompanying Explosions in the Exhaust Pipe.

Cause of the trouble.—Ignition does not take place, (*a*) in engines with hot-tube ignition, because the tube is not hot enough or because it becomes foul inside.

Explanation and remedy.—In petrol, benzol, and alcohol engines, the hot tube only acts when it is red-hot. It is necessary to see whether the heating lamp is burning well; its supply must be regulated and the cinder removed from the wick.

Should the valves be tight and the lamp burning well, the trouble can only be traceable to the stopping up of the ignition tube or of the carburettor. This occurs mostly in paraffin engines working with vaporisers, when these engines are too freely lubricated or when the fuel supply is too abundant. In the latter case, the objects near the exhaust pipe outlet are frequently wet with paraffin over a large radius.

(*b.*) In engines fitted with electric ignition. Electric ignition is subject to many disturbing influences. In cold weather, water is deposited on the internal parts of the device, this water coming from the products of combustion; or lubricating oil is deposited on the sparking points; or again the insulation is covered on the inside with a coating of soot and carbonised oil. In low-tension ignition devices, the lever frequently works stiffly, or its spring is damaged, broken, or it falls off. The current conductor may

Digitized by Google

become loose at the engine terminal or be broken; or it may be badly insulated and may touch a metallic part of the engine.

Explanation and remedy.—The most common cause is the "sweating" of the parts in the combustion chamber. This occurs in cold weather, when the mixture drawn in is much hotter than the inside of the engine. The moisture of the air and the fuel vapours resolve themselves into a damp coating on some fittings of the ignition device, and sparking is prevented.

Preventive measures.—The ignition mountings or the plug should be removed for a short time before starting the engine, and deposited in a warm place. The engine should be started immediately the device is replaced.

The ignition interrupter lever spindle sticks fast.

Explanation and remedy.—This spindle becomes very hot when the engine is running, and its working may be interfered with by the formation of rust, or by clogging owing to the coagulation of the oil that is sprayed against it, while the strength of the weak spring driving the lever against the contact point becomes insufficient. The spindle is wetted with paraffin and worked up and down until it moves freely. A good attendant always sees that the ignition lever works freely before starting his engine.

The ignition interrupter lever spring falls off, is damaged or broken.

Explanation and remedy.—The ignition interrupter lever spring being repeatedly strained and released, the ends by which it is fixed may become slightly bent, or the spring may become stretched. In either case it may happen that the ignition lever does not complete its return movement, and sparking is not regular. A number of spare springs must be kept at hand.

Circuit is broken.

Explanation and remedy.—The conductors should often be inspected. The contact screws which hold the wire or the conductor easily become loose; it is most important always to test the current before starting. In plug ignition, when the plugs become loose, sparks may be noticed, a sign that the metallic parts holding the plug and the engine come in contact with each other. With low-tension ignition, the fingers may be placed in connection with the contact screw and ignition interrupter lever, and the apparatus is given a slight rocking motion; a slight shock will then be felt if the device is in working order.

3. The Engine, fitted with an Electric Ignition Device, stops after a few Ignitions.

Cause of the trouble.—(*a.*) Electric ignition refuses to act, because in cold weather the inner portion of the device is wet from the water vapours due to the first explosions.

Explanation and Remedy.—The gases resulting from the combustion of the charge in the cylinder are water vapour and carbonic acid. The water

Digitized by Google

vapour is turned into water in the combustion chamber, because its sides are still cold and absorb the heat rapidly, and it is only after a number of successive explosions that the walls become sufficiently hot to prevent any further condensation of the vapour. As already stated, the plugs or the mountings should be removed and heated.

(*b.*) The oil sprayers may also refuse to work after the first few ignitions. While the engine is standing, large quantities of oil collect at the bottom of the cylinder, or, in vertical engines, on the piston head. The working of the piston drives this oil towards the combustion chamber, where it spreads after the first few ignitions. If a drop of the oil reaches the sparking points or comes between the interrupter lever and point, this would be quite sufficient to prevent ignition. In this case the plug or ignition mountings should be removed and cleaned. In order to prevent this trouble in horizontal engines, many builders now fit the combustion chamber with a drain-cock, through which the excess of lubricating oil should be blown off after starting. It is also as well to open this cock, and to turn the engine for a little while without supplying it with fuel. An oil blow-off cock cannot be fitted to vertical engines.

This cock is also useful for ascertaining whether an inflammable mixture is properly formed, and whether ignition takes place or not. When the fuel supply is open, the engine revolved slowly and the oil-cock opened before completing compression, if mixture formation and ignition are working properly, a light-blue flame is driven with a good deal of noise through the cock. Should no such flame be produced, either the mixture formation or ignition is out of order. If a flame be held at the cock opening, and the out-rushing current of gas becomes ignited, it is a proof that ignition is in default. Should a yellow flame appear at the cock, it is a sign there is too much fuel in the mixture. In automobiles, the pet cock may be used for such tests. These tests, of course, must be carried out with care. For lighting the mixture, an alcohol lamp burning with a long flame should be used preferably to any other. The wick of the lamp should not be opposite the cock opening. One's body, and especially one's head, should be held well out of the way, for the flame issuing from the cock may cause dangerous burns.

4. Running is effected only after a large number of Idle Revolutions; the Engine develops no power, because Ignition fails periodically.

This trouble may be due to several causes.

Cause a.—The exhaust valve spring has become fatigued; is too weak or broken. *b.*—The fuel proportion in the charge is not normal. *c.*—In tube ignition, the tube is not sufficiently hot.

Explanation and Remedy.—(*a.*) If the exhaust valve spring has become fatigued, or is too weak or broken, it does not offer sufficient resistance during the suction period, and the exhaust valve opens during this period as well as the suction valve. In this case air or combustion gases remain in front of

Digitized by Google

the exhaust valve, in the exhaust head or exhaust pipe, enter the cylinder and reduce the quality of the mixture to such a degree that it becomes uninflammable. This uninflammable mixture, which, however, contains fuel, is driven into the exhaust head, and part of it returns to the cylinder on the next suction-stroke. On the first stroke there entered only into the cylinder gases of combustion; on the next a weak mixture is formed, and at each successive suction-stroke this becomes enriched until it becomes inflammable and results in a working stroke, when the same sequence is repeated. The length of the period between explosions is dependent on the strength of the spring.

(*b.*) *Ignition ceases periodically, because the proportion of fuel in the charge is too low.*

Explanation.—Here also the charge becomes richer gradually as in the case pointed out under (*a*). Should the weak mixture formed be inflammable of itself, it becomes transformed, on mixing with the products of combustion remaining in the combustion chamber, into an uninflammable mixture, and it is only when the products of combustion are, as it were, overcome by a second, third, or fourth suction-stroke, when therefore a pure though perhaps poor mixture is formed in the combustion chamber, that ignition takes place. Then fresh combustion gases are produced, and the sequence is repeated.

(*c.*) *Ignition becomes irregular, because the ignition tube is not sufficiently hot.*

The poorer the charge and the colder the engine, the higher must be the temperature of the ignition tube to insure regular ignition. It is possible for a mixture supplied pure from the carburettor to become ignited by a tube having only a low temperature, but this does not happen when the mixture is adulterated by the products of combustion which remain in the combustion chamber. In this case also ignition fails periodically until the mixture gradually becomes sufficiently enriched.

5. Irregular Running.

The engine runs fast, then slows down.

Cause of the trouble.—Faulty action of the governor.

Explanation and remedy.—In the case of engines fitted with a centrifugal governor, regularity in running depends very much upon the careful handling of this mechanical device. The arms, slides, guides, etc., all the parts in fact which constitute the governor, must always be kept well lubricated, otherwise it works stiffly and jams occasionally, this, of course, greatly reducing its sensitiveness. When it acts well at first and gradually becomes irregular in its action, the fault is attributable to lack of proper attention. It is not advisable that the driver should take it to pieces, but he should use turpentine or paraffin at the lubricating parts to dissolve the coagulated lubricating oil, until it runs freely. Then thinner lubricating oil should be used.

In small engines, in most of which absolutely regular running is not essential, inertia governors should be used, as they are easier to keep in order than centrifugal governors. In inertia governors the sharp tripping edges may wear down in time, but this may be remedied by resharpening them or

Digitized by Google

by renewing the tripping piece. In the latter case, care should be taken to see that the new edges are of correct length.

6. The Engine stops after running for some time.

This may be attributable to—(*a.*) Ignition not taking place. (*b.*) The valves leaking. (*c.*) The asbestos joints being damaged. (*d.*) The nuts on the valve chest cover or on the ignition mountings having slackened back. (*e.*) The fuel supply pipes being stopped up. (*f.*) The presence of too much water in the exhaust head. (*g.*) Lubrication being defective.

Explanation and remedy.—(*a.*) The most delicate part in any engine is the ignition, especially when this is one of the electric systems. It is necessary in the first place to ascertain whether ignition occurs regularly or not. This is done in the quickest and safest way by opening the oil or blow-off cock, the flame which appears from this showing whether ignition does take place or not. The failure of the ignition may be due to loosened terminal screws on the current conductors; holding down of the ignition interrupter lever; broken or damaged spring on the exterior arm of the ignition lever; soot or carbonised oil on the insulation inside the combustion chamber; oil drops, water condensed on the ignition insulation; or fracture of the insulator. Testing for ignition is carried out in the manner above described.

(*b* and *c.*)—It is possible to discover immediately whether leaky valves or other leaky parts are the cause of the trouble when the resistance to compression is small and the pressure quickly falls. Resistance to compression is tested more quickly when the flywheel is turned backwards. The cause of any leak is traced by a hissing noise, which occurs when the flywheel is turned backwards. The point which leaks is found by means of an uncovered light, by using oil or soap-water (when air-bubbles are formed), or by the action on fine threads of waste.

(*d.*)—The nuts on the inlet or exhaust valve chests, or on the ignition mountings, may become loose; especially is this liable to occur when new packing has been inserted. The material used, asbestos pulp, absorbs damp rapidly, the water evaporates after starting the engine, the asbestos pulp dries, and the first screwing up of the nuts becomes insufficient. Where this asbestos pulp is used, the nuts should be tightened down after the engine has started running. If this be not done, the joint is damaged and blown out.

(*e.*)—Notwithstanding the fact that some kind of filter is used in every engine installation, stoppages may occur in the fuel supply pipe from filings or other foreign matter finding their way in between the filter and the engine during erection of the plant. The openings in the carburettor are very small, and very fine particles suffice to stop them up. The filters also may become stopped up in course of time, especially if they have not a sufficient filtering surface. When an engine stops, therefore, the carburettor and the float valve should be removed and inspected, to see whether the fuel has a free passage or not.

(*f.*) *Presence of too much water in the exhaust head.*—The exhaust head, or

Digitized by Google

silencer, frequently receives too little attention. Usually, and this is a grave mistake, it is not made easily accessible. The exhaust head, as is well known, is not only intended to stifle the noise of exhaust, but is also required to collect the water condensed from the gases of combustion. In cold weather, and with long exhaust pipes, the quantity of this water becomes so large that it must be run off several times a day. If this be not done, the water, especially with "hit and miss" governing, may easily find its way to the cylinder of the engine and cause the latter to stop, either by disturbing electric ignition, by causing the hot ignition tube to break, or by having an unfavourable influence on the mixture formation. The removal of water from the cylinder is frequently an intricate operation; it involves the removal of the inlet valve and soaking up the water with a ball of rolled-up waste. All such difficulties are prevented when, in cold weather, the blow-off cock, or the exhaust head is left open so that the water can drain away.

(*g.*) *Defective lubrication of cylinder or bearings.*—When using ring lubrication, splash lubrication, or lubrication under pressure, defects under this head rarely occur. The oil supply pipes or the lubricating ports may become stopped up, or the screws fixing the covers of the bearings may be too tight, and the delivery of oil may be hindered, and one or more bearings become hot and a resistance sufficient to stop the engine may result. When the engine is cleaned, the driver should therefore see that the flow of oil to each lubricating point is perfect; he should also make sure that no bearing runs hot after the engine has been working for any length of time.

7. The power developed is too small, or the Engine runs too slowly.

Causes of the trouble.—(*a.*) The ignition is timed too early or too late. (*b.*) If an automatic inlet valve is used, the spring is too stiff or the valve has too short a travel. (*c.*) Misfires occur. (*d.*) The valves or the piston are no longer tight, or leakage occurs at the other points. (*e.*) The exhaust valve is stopped up. (*f.*) The exhaust valve spring is damaged or too weak. (*g.*) The parts forming the gearing, or bolts or washers, have become worn. (*h.*) The gear wheels have become relatively displaced, and the wrong teeth engage one another. (*i.*) Too small a quantity of fuel is supplied.

The decrease in power developed is one of the most common and most annoying of troubles; it occurs as a rule with engines worked to the limit of efficiency.

(*a.*) *The ignition is timed too early or too late.*—The great influence which an accurate timing of the ignition has on the power developed, was only realised as recently as about ten years ago, since the construction of high-speed automobile engines and large gas engines, and since the introduction of electric ignition, by which means the instant of ignition can be very simply controlled.

The greater the speed; the greater the dimensions of an engine; or the poorer the charge, the earlier must the ignition take place. Devices for controlling the time of ignition when the engine is running, are therefore of the

Digitized by Google

greatest importance for a large development of power, and the driver must thoroughly understand the action of these devices.

(*b.*) *The inlet valve spring is too weak or the valve has too short a travel.* An important point in the development of power in a gas engine is the action of the inlet valve. If the capacity of the cylinder is to be properly taken advantage of, it must be filled with as large a charge as possible. An automatic valve cannot satisfy this condition of working, as its action cannot be controlled. It opens only when suction on the suction-stroke has become sufficient to overcome the weight of the valve or the strength of the spring. The valve then does not remain steadily open, but vibrates, providing a passage of constantly varying size. This results in two disadvantages: (1) the quantity of the charge is reduced, and (2) there is also a possibility that the valve only closes when at the end of the stroke a part of the charge in the cylinder back-fires, air being a compressible medium.

The irregularities due to the closing of the inlet valve too late, give rise to: (1) reduction in the power developed; (2) loss of fuel; and (3) odour in engine-room. In order to ascertain whether the charge is driven back through the inlet valve, an uncovered flame or a fine thread is held in front of the air inlet port; if the flame or the thread is blown outwards on completion of the suction-stroke, the charge is wasted. By altering the tension of the spring, or by replacing the spring by a stronger or a weaker one, the defect can usually be remedied.

(*c.*) *Misfiring.*—Ignitions periodically missed, or retarded ignitions, occur with tube ignition when the tube is not sufficiently hot. This can be remedied by renewing the asbestos in the flame chimney and by reducing cooling.

(*d.*) *Leakage of valves, piston, or covers.*—Leakage in the engine leads to loss of fuel. The smaller the dimensions of the engine and the higher compression is, the greater are the disadvantages due to leakage. Leakage of the valves can only be traced by inspecting their ground faces. The piston is not tight when there is a hissing noise when the engine is running. In engines with enclosed crank casings (automobile engines, etc.), the cover must be removed and the engine turned round by hand, to ascertain whether the hissing noise is produced. Leaks in the covers of the valves, ignition mountings, etc., can be traced, as already stated, by using oil or soap-water.

(*e.*) *Stopping up of exhaust pipe and exhaust head.*—Loss of power due to the stopping up of the exhaust pipe always occurs gradually. The cause of this is the formation of carbonised oil, the deposit of coagulated lubricating oil, and, in petrol engines, of unburnt fuel residues, which settle down in course of time on the sides of the exhaust head and pipe. The more copious the lubrication of the piston, and the less frequent the use of the oil blow-off cock, the more rapidly does this trouble arise. In course of time, in every internal combustion engine, the exhaust pipe opening becomes constricted. When the lubrication of the piston is done carefully, the blow-off cock made use of regularly, and the fuel in paraffin engines supplied in correctly pro-

Digitized by Google

portioned charges, the narrowing down of the exhaust pipe occurs more slowly. But the exhaust pipe has from time to time to be unscrewed from the exhaust head and inspected. The carbonised oil and paraffin residues should be burnt out by placing the pipe on a smith's hearth.

(*f.*) *Damaged or too weak exhaust valve spring.*—Every spring gradually loses its strength, and the exhaust valve requires a spring which has always the same strength. During the suction period, there is a partial vacuum in the working cylinder, against which the exhaust valve must offer resistance. On the other hand, the spring must not be too strong for the exhaust gear to overcome the end pressure when performing the opening movement. The driver should ascertain occasionally by hand whether the strength of the exhaust valve spring is correct.

(*g.*) *The parts of the valve gear, bolts, washers, and bearings have become worn.*—The wearing of these parts reduces the opening period of the valves, the products of combustion cannot be completely discharged, the charge contains more gases of combustion and less mixture, resulting in low working pressures.

(*h.*) *The gearing pinions are displaced, and the teeth are not in mesh correctly.*—The taking down of the gearing of internal combustion engines is a rare occurrence, but just because it is but seldom necessary, it may happen that on putting the engine together again the driver does not pay sufficient heed to the marks made on the teeth. If the teeth are shifted to any great extent, the engine will not run; if there is a difference of only one or a few teeth, the engine will run, but it will develop a much smaller power. When an engine is found to develop less power after the lay-shaft has been removed and replaced, it is practically certain that the wrong teeth in the pinions are in gear.

8. Explosions occur while drawing in the Charge.

The *causes* of this are: (*a.*) Formation of slowly burning mixtures. (*b.*) Imperfect cooling. (*c.*) Burning of lubricating oil vapours. (*d.*) Red-hot carbonised oil particles or asbestos fibres. (*e.*) "Pockets" inside the combustion chamber.

Explanation. — Explosion during the suction period, or back-firing, is always due to a premature ignition of the charge on entrance into the working cylinder, while the inlet valve is still open. This belongs to the most annoying class of troubles, and is frequently most difficult to remedy. As a possible course, under (*a*) is given the formation of slow-burning mixtures, due to insufficient amount of fuel or too large a proportion of combustion residues.

If there is only a small proportion of fuel, the combustion of the charge proceeds so slowly, that the flame remains in the cylinder during the exhaust period and also during the commencement of the suction period, producing there an undesirable means of ignition which comes into action at quite the wrong period, and the suddenly formed gases of combustion rush out with more or less noise through the open inlet valve.

Digitized by Google

(*b.*) *Imperfect cooling.*—The higher the temperature of the combustion chamber walls, the higher is the temperature of the residues that remain there, and the greater the risk of the fresh charge becoming ignited on entering. The larger the engine, the thicker are the walls of the combustion chamber and, in this case, the longer it takes to cool them, resulting probably in more frequent back-fires, especially when the engine is running at a high speed. In large engines, therefore, the temperature of the cooling water must not rise so high as with small ones.

(*c.*) *Burning of lubricating oil vapours.*—The cylinders are usually lubricated with mineral oil. As the combustion temperature in the cylinder rises much higher than the temperature of distillation of the oil, oil vapours are produced which, under normal conditions, burn with the charge, doing useful work. But should the mixture of these oil vapours with the charge be incomplete, or should it not contain a sufficient proportion of air, it burns much more slowly than the correct charge, and this slow burning may result in the firing of the following charge.

A peculiar point about back-firing is that the explosions always occur singly, after short or long intervals. This is easily explained. When a back-fire occurs, more or less of the cylinder surface has been laid bare, almost the whole of the oil-covered surface is exposed to the high temperature of combustion, and large quantities of oil vapours are formed and driven out through the inlet valve. Another ignition does not follow immediately, because the air-pipe and suction passages do not contain air, but the products of combustion resulting from the back-firing. The cylinder cools down somewhat, the excess of lubricating oil has been carried away, and for a time normal running proceeds. By using a heavier lubricating oil and reducing lubrication, the irregularity may be minimised.

(*d.*) *Incandescent carbonised oil or asbestos fibres.*—When the combustion chamber, the exhaust valve, and piston are not sufficiently cleaned, particles of carbonised oil are easily deposited, become red-hot, and lead to premature ignition of the entering charge. Small pieces of asbestos fibre which find their way into these parts may have similar effects. The asbestos packing must always be cut clean and held securely in place. Good engines, however, have no asbestos packing, but are made throughout with ground joints; these need to be handled with care, but they are the best and most reliable and do not leak.

(*e.*) *"Pockets" which are in direct connection with the explosion chamber.*—This cause of back-firing is but little known. The space need not be large, and the 10 mms. ($\frac{3}{8}$ in.) bore of the indicator mounting, or the bore for the oil-cock, or that for the water drain-cock, which is found still in the older types of engines on the ignition tube, may be quite sufficient to cause this trouble.

Explanation.—The blind holes of different length become filled with gases of combustion after the working-stroke; on compression, inflammable mixture is driven inside them, and there is thus formed a slow-burning mixture which increases while the new charge is being drawn in. Towards the middle of the

Digitized by Google

suction-stroke, when the piston travels faster and a greater vacuum is formed inside the cylinder, the flame issues from its "hiding-place" and ignites the mixture in the cylinder.

The boring for indicator cocks must therefore be closed by a screw plug which fills it up completely. The oil drain-cocks must be made very narrow or replaced by valves.

9. Knocking Occurs in the Engine.

Since the time when high-speed engines working with high compression and electric ignition were built, it has become necessary to make it possible to regulate the timing of ignition, and one of the duties of the driver is to be familiar with present-day conditions. When ignition is too late, power is lost; if it occurs too early, the engine runs more stiffly, and bad knocking occurs from time to time. With a hot tube, ignition may also occur prematurely, and the engine runs stiffly, power is decreased, and the life of the engine reduced. Premature and irregular ignition with the tube occurs with short, wide, and also conical-shaped tubes. The evil is lessened by reducing the opening of the tube in the combustion chamber, by inserting inside it a wrought-iron ferrule.

Knocking of a special character occurs in paraffin and petrol engines. These fuels, and especially paraffin, withstand only a low compression, as they have a very low ignition temperature. If, added to this, the engine is insufficiently cooled and runs at a high speed, the charge ignites before the dead point is reached, simply owing to the heat of compression. This kind of ignition is of quite a different nature to the ordinary ignition which starts from one point; it has the character of a veritable explosion, resulting in the general and complete ignition of the mixture. The knocks so caused are violent and extremely detrimental to the engine, and the fracture of crank-shafts and crank-shaft bearings may be the result. This explains the loss of propeller blades in motor-boats.

Knocking caused by the wear of separate parts of the mechanism is regular in occurrence, while compression ignitions occur singly in most cases, and only after running temperatures have been reached.

The parts the most liable to wear are the gudgeon pin, the flywheel key, and the crank bearing. Since about the middle of the 'eighties, when the greater number of engine-builders ceased to key the flywheel on the cylindrical seating of the shaft, and took to shrinking it on to a tapered fit, knocking due to a loosened key no longer occurs. When, however, the flywheel and locking nut are not sufficiently tight, and no safety arrangement is provided, the engine stops still with a sudden jerk and the flywheel works loose on the shaft.

10. The Engine runs at too high a Speed.

The cause of periodical or constant excessive speed in the engine is always traceable to the governor. A periodic increase and decrease in speed

Digitized by Google

occurs when the governor is insufficiently lubricated or is worn. When the engine runs steadily at too high a speed, this is usually due to defective governor gear. When the governor is not carefully attended to, the lubrication ports become foul and no oil reaches the governor spindle or ring, friction is set up, the teeth of the pinions break, or, if the governor is driven by a belt,[1] this may fall off and the engine get out of control. Should the belt fall by reason of the high speed of the engine, the occurrence is a most serious one. The flywheel may break, the connecting rod bolts may shear off, and the engine in such a case will break down completely.

Dangers and Precautions with Internal Combustion Engines.

Every engine has its own peculiar dangers, and the driver must make himself acquainted with these in order to guard against them. With internal combustion engines the principal dangers are from fire or explosion due to the kind of fuel they use.

Fire and explosion risks are entailed by leakage of the fuel supply pipes, and the driver must therefore make sure that all connections are tight. When pipes have been removed and replaced, all connections and flanges must be screwed up tight and tested for leaks. Most of the petrol engines now used are so built that the fuel is supplied to them under a very low pressure, either by placing the fuel tank at a level slightly higher than the engine, or by creating a pressure inside the tank. As soon, therefore, as a leak occurs at any part of the piping, the whole tank empties itself. The fuel runs into the engine-room, and fires or explosions cannot be prevented if this should catch alight.

Notwithstanding all the regulations laid down by the Insurance Companies, the greatest care must be exerted.

The greatest risks for the driver himself arise from the easily volatilised fuel residues which may remain in the engine. When an engine in which an unignited mixture has remained, is opened out, either by removing a valve or removing the piston, the mixture may become ignited if the ignition is electric and the engine is revolved. A large flame then issues from the open valve or from the cylinder opening.

In such cases, the driver has often been severely burnt; the accident may be provided against by taking care to *see that before any work be undertaken on the engine, ignition is cut out*; then a light is held, from a distance, inside the cylinder to ignite the charge or portion of a charge that may remain.

All persons occupied in such inspection of engines must receive due notice of the risks in question. No man must be allowed to revolve the flywheel by pressing with his foot on the wheel arms, or taking hold of the rim in such a way that his arm extends through the wheel between the spokes. The flywheel must always be drawn towards one either by taking hold of the arms or the rim, and not driven away from one. In this operation a firm foothold

[1] The driving of the governor by a belt is dangerous and should never be adopted.

Digitized by Google

must be secured; efforts should be abandoned as soon as it is found that they are not sufficient to overcome compression.

Inspection of the inside of a heating-lamp chimney or cowl should never be permitted during running. It has very often happened that the ignition tube has cracked at the very instant it was being seen to, and hot porcelain splinters and particles of hot asbestos fibre have been driven in the attendant's eyes. The danger is greatly increased when, during inspection, the lamp or the chimney are displaced in any way.

In a general way, mention may also be made of the dangers arising from lack of protection of flywheels, belts, shafts, and toothed gearing. In these directions protective measures have only too often been ignored. Protective wire-netting guards for flywheels, belts, etc., are effective only when made high enough to prevent persons leaning on them. As far as it is practicable, all engines should be provided with compressed-air starting arrangement.

The wiping and handling of moving engine parts should be forbidden, and the driver should not, above all things, approach toothed gears with cleaning waste, for even when these are protected with covers, threads of the waste may become seized by the gear and may draw in the driver's hand before he can free himself. The action of a number of fitters and drivers of taking hold of the connecting rod when the engine is running, or in allowing the connecting rod end to touch the hand to see whether the bearing is loose or is running hot, is always a dangerous practice. All works now fit a cover over the crankshaft and connecting rod, so that this cannot be done with modern engines.

Digitized by Google

INDEX.

ACCESSIBILITY of liquid-fuel engines, 238.
Adler-Fahrradwerke automatic carburettor, 52.
  automobile engines, 142.
  centrifugal governor, 68.
Admission governing, 66.
Agricultural installations driven by liquid-fuel engines, 243.
Air- and water-pumps, motor-driven, 225.
  -cooler for liquid-fuel engines, 242.
  -cooling of cycle engines, 156.
  -gas from petroleum distillates, 4.
  supply pipe of liquid-fuel engines, 240.
Airship construction, history and development, 213.
  engine, "Antoinette," 178.
  engine, Körting's, 177.
  engines, 213.
Akroyd paraffin engine, 32.
  pump, 34.
Alcohol and benzol mixtures, 16, 17.
  and petrol stationary engines, 92.
  as liquid fuel, 7.
  as liquid fuel, prices of, 7.
  calorific value of, 16.
  characteristics of, 16.
  compressibility of, 17.
  engines, decrease in number of, 8.
  fire and explosion risks, storage, 17.
  future of, for heat, power and light, 8.
  mixture formation and ignition, 17.
  stationary engines: conditions ruling their installation in Germany, 243.
Aluminium in automobile engines, first use of, 140.
American oil-fields, 1.
Animal life the origin of petroleum, 2.
"Antoinette" sixteen-cylinder airship engine, 178.
Asphalt, its origin, 2.
Attendance of liquid-fuel engines, 237, 251.
Automobile construction, history and development of, 180.
  engines, history and development of, 137.
Automobiles of recent construction, 182.

BALLOON engines, 213.
Bánki carburettor for oil and petrol, 50, 57.
  stationary liquid-fuel engines, 124, 127.
Barnett English patent of 1838, 18.
"Bayard" chassis, gear and cars, 188.
  four-cylinder automobile engine, 151.
Benz automobile engine, 139.
  early attempts at motor-car construction, 181.
  ignition device, 84.
Benzol and alcohol mixtures, 16, 17.
  calorific value of, 15.
  characteristics of, 15.
  distilled from coal tar, 5.
  extracted from coke-oven gases, 6.
  fire-risks of, 15.
  high compressibility of mixture of, 15.
  in lighting gas, 6.
  mixture of, with air, 15.
  prices of, 6, 15.
  resolved into its component parts, 6.
  uses of, 6.
Bieberstein dynamo car, motor-driven, 233.
  engine-driven dynamo, 234.
  locomobiles, 222.
  motor boat, 216.
Bituminous substances, their origin, 2.
Blade-shifting device for motor-boat propellers, 204, 210.
Blanke & Rast lubricating pump, 74.
  oil-filter, 75.
Boat and ship engines, their history and development, 163.
Boats driven by internal combustion engines, 204.
Boring for petroleum, first carried out in 1859, at Titusville, 2.
Bosch adjustable contact heating device, 89.
  electric ignition, 80.
  high-tension ignition apparatus, 87.
    plug for, 88.
  ignition apparatus, with rotary armature, 89.
  magneto-ignition plug (Honold system), 90.
Brayton petrol engine, 20.
Bronsmotorenfabrik stationary paraffin engine, 136.
Brown coal distillate: "Solaröl," 7.
  distillation, by-products of, 7.
  liquid distillates of, 5.
By-products of brown coal distillation, 7.

CABLE terminal eye, 91.
Calorific value of alcohol, 16.
  of "ergin," 16.
  of paraffin oil or kerosene, 12.
  of petrol, 10.
Canadian oil-fields, 1.

Digitized by Google

Canello-Dürkopp automobile engine, 140.
Capitaine carburettor, 56.
oil-heating lamps, 63.
paraffin engine, 29.
carburettor, 31.
governor, 31.
Carburettor, Adler-Fahrradwerke automatic, 52.
Bánki's, 50.
for oil and petrol, 57.
Capitaine's, 56.
Clément's, 53.
Daimler's, 26, 51, 163.
for heavy fuels, 55.
for light fuels, 48.
Körting's, for stationary engines, 50.
Longuemare's, 53.
for heavy fuel, 57.
latest type, 54.
Neckarsulmer Company's, 54.
of Capitaine engine, 31.
of "La Motosacoche," 157.
Centrifugal governor, Adler-Fahrradwerke's, 68.
Daimler Co.'s, 68.
Characteristics of liquid fuels, 9.
Chassis of six-cylinder "Hexe" car, 187.
of various cars, 188.
Claudel carburettor with "Hexe" automobile engine, 148.
Cleaning of engines, how to proceed in the, 252.
Clément's carburettor, 53.
Coal gases, 5.
liquid distillates of, 5.
origin of, 5.
-tar distillates, 5.
Coke-oven gases, benzol extracted from, 6.
Combustion chamber, its construction, 42.
Component parts of paraffin and petrol engines, 41.
Compressed air starting and reversing for boat engines, 210.
Compression pressure sufficient for igniting paraffin, 14.
Conditions ruling in Germany for stationary liquid-fuel engines, 247.
Connections of high-tension ignition apparatus, 88.
Construction of paraffin and petrol engines, 39.
Contact-breaker of the Neckarsulmer Co., 86.
Contact-breaking device, Bosch adjustable, 89.
ignition, 83.
Cooling jacket of Deutz stationary engines, 100.
of liquid-fuel engines, 240.
tank arrangement, 240.
with water under pressure, 240.
Crane, engine-driven, the "Oberursel," 232.
Crank chamber of engines, 41.
shaft of six-cylinder "Hexe" automobile engine, 151.
Crude benzol distilled from coal tar, 5.
uses of, 6.
oil and paraffin stationary engines, 126.
Crude petroleum: its composition, 3.
and its distillates, 1.
Cut-out governing, 66.
Cycle engines, 154.
"Cyklon" three-wheeled motor car, 188.
Cylinder lubricating apparatus, 73.
lubrication, 71.
of engines: its construction, 41.

Daimler car, driven by combustion engine: the first attempt, 180.
carburettor, 26, 51, 163.
Co's. centrifugal governor, 68.
cycle, driven by combustion engine, the first attempt, 180.
engine-driven fire-engine, 231.
rail car of 1887, 201.
engine: the first boat engine, 163.
engines for boat propulsion, 204.
four-cylinder automobile engine, 146.
friction gear for motor boats, 204.
inventor of automatic hot tube ignition, 76.
motor boat internal arrangement, 208.
the first, 208.
motor-driven railway carriage, 203.
trolley, 203.
motor omnibus, 192.
petrol engine, 24.
pressure devices for heating lamps, 62.
"summer car," 201.
tube ignition device, 25, 76.
Dairy mechanically driven, 245.
Dangers, and precautions to be taken, with engines, 254.
De Dion-Bouton automobile engine, 140.
ignition device, 84.
sparking-plug, 84.
Deutz engine-driven air-compressors, 230.
locomotives, 204.
pumps, 227.
liquid-fuel stationary engines, 98.
locomobiles, 220.
lubricator, 74.
paraffin boat engine, 170.
piston ring stud, 45.
pressure pump for lubrication, 74.
stationary engines, details of, 102.
stationary vertical high-speed engines, 103.
vertical stationary engines, details of, 105.
Diesel engine air-pump, 129.
engine fuel-pump, 59.
engines, 28.
in passenger and cargo ship, 217.
in Russian gunboat, 218.
experimental engine, first built, 35.
second built, 36.
stationary paraffin engine, 128.
details of, 130, 133.
two-cycle engines for boats, 210.
Dirigible balloon engines, 213.
Distillates, liquid, of mineral coal, 5.
of petroleum, 1.
classification of, 3.
grouping of, 4.
their uses, 4.

Digitized by Google

Dynamo car, motor-driven, by Bieberstein, 233.
engine-driven, by Bieberstein, 234.
used for driving propeller shaft, 210.

ELECTRIC contact-breaking ignition, 83.
drive of propeller shaft, 210.
of vehicles coupled to liquid-fuel engine, 210.
ignition, 79.
mounting, 83.
of Tangyes engines, 119.
Engine frame and crank chamber, 41.
oil, distilled from petroleum, 4.
Engine-room of passenger and cargo ship, showing Diesel engines, 217.
Erection and attendance of liquid fuel engines, 237.
"Ergin," a mixture of benzol distillates, 6.
and alcohol mixtures, 16, 17.
fire risks and regulations, 16.
mixture formation with, 16.
production, calorific value and price of, 16.
Ernst Eisemann & Co.'s improvements to electric ignition, 85.
Exhaust pipe of liquid-fuel engines, 239.
Extraction of liquid fuels, 1.

FATS, liquid fuel from, 7.
Feed pump for starting Tangyes engines, 119.
Filter, the Blanke & Rast oil, 75.
Körting's wire gauze, 60.
Longuemare's, for automobiles, 60.
wire gauze, 60.
Fire-engine, Daimler engine-driven, 231.
Fire risks with paraffin engines, 14.
with petrol engines, 11.
Fischer cable terminal eye, 91.
magneto-electric ignition apparatus, 83.
safety crank for starting, 70.
Flywheel governor, Körting's, 68.
Foundations for liquid-fuel engines, 237, 239.
Four-cylinder Adlerwerke automobile engine, 142.
"Bayard" automobile engine, 151.
Daimler automobile engine, 146.
Swiderski automobile engine, 152.
Friction gear for motor boats, Daimler, 204.
Fuel filters, 60.
liquid, derived from coal, 5.
pumps, 58.
Funk, patentee for an ignition tube, 77.

GALICIAN oil-fields, 1.
Ganz engine-driven plough, 232.
locomobiles, 224.
Gardner one-cylinder paraffin boat engine, 171.
stationary engines, 115.
details of, 117.
two-cylinder paraffin boat engine, 172.
Gases from coal, 5.
Gasolenes, specific gravity of, 4.
Gasoline gas engines of Otto & Langen, 18.
German conditions ruling the installation of liquid-fuel engines, 247.
German oil-fields, 1.
"Gnom" vertical engines, details of, 113.
Governing of engines, methods available, 65.
Governor of Capitaine engine, 31.
Governors for engines, 65.
Grob & Co.'s reversible propeller, 209.
valveless oil-pump, 59.
wood-sawing and cutting machine, engine-driven, 236.
Ground for foundations of liquid-fuel engines, 237.
Gudgeon pins, types of, 44.
Gunboat equipped with Diesel engines, 218.

HANOVER oil-fields at Peine, 1.
Haselwander and Trinkler engines, 27.
Heating lamps for oil and petrol engines, 61.
Heavy fuel carburettors, 55.
"Hexe" six-cylinder automobile engine, 148.
six-cylinder car, chassis of, 187.
High-tension ignition, advantages of, 85.
diagram of connections for, 88.
plug, Bosch, 88.
Hit and miss governing, 66.
Hock engine built in 1873, 18.
Homogengas from petroleum distillates, 4.
Honold system of magneto-ignition plug, 90.
Horizontal engine frame, with cylinder liner, 41.
trunk piston type, 40.
type with crosshead guide, 40.
Hornsby-Akroyd paraffin engine, 32.
Hot-tube ignition, 25, 76.
sections, 78.
Hydrirene, specific gravity of, 4.
Hydrocarbons, liquid, from coal tar, 5.

IGNITION devices for oil and petrol engines, 76.
methods and regulations with petrol engines, 11.
of Deutz stationary engines, 101.
of Körting stationary engines, 95.
of paraffin, 13.
Illuminating oils, specific gravity of, 4.
Inclined engine type, crank-shaft below, 40.
Inertia governor, Krupp's, 67.
Inflammability of petroleum distillates, 5.
Installations driven by liquid-fuel engines, 243.
Irregularities in running, correction of, 254.

KÄMPER boat engines, 173.
and winch-driving engines, details of, 175.
Kerosene, calorific value of, 12.
characteristics of, 12.
distillated from petroleum, 3.
price of, 12.
Kjelsberg paraffin engine, 28.
Korff, Bremen, distillates obtained by, 3.
petrol, specific gravity of, 4.
Körting airship engine, 177.
carburettor for stationary engines, 50.
cylinder lubricator, 74.
engine-driven pumps, 227.

Digitized by Google

Körting engine-driven traverser, 235.
flywheel governor, 68.
liquid-fuel stationary engines, 92.
ignition, 95.
paraffin engine for submarines, 169.
radiator, 241.
stationary engines, details of, 97.
water-work installation, motor-driven, 225.
wire gauze filter, 60.
Krupp inertia governor, 67.

"La Motosacoche" carburettor, 157.
cycle engine, 158.
motor cycle, 199.
Lamps, heating, for oil and petrol engines, 61.
Lenoir's electric ignition, 79.
Lieut. Troost's motor-driven tractor, 199.
Light fuel carburettors, 48.
Lighting oils, specific gravity of, 4.
Liquid distillates of mineral coal, 5.
Liquid-fuel engines and steam engines compared, 180.
coupled to dynamos on boats and vehicles, 210.
driving various installations, 243.
engine installations: conditions in force in Germany, 247.
Liquid fuels, characteristics of, 9.
classification of, 9.
for power production, 9.
from various substances, 7.
their origin and extraction, 1.
Location of liquid-fuel engines, 238.
Locomobiles, liquid-fuel engine-driven, 220.
Locomotive, motor-driven, for field and forest track, 205.
Locomotives, engine-driven, 204.
Longuemare carburettor, 53.
for heavy fuel, 57.
latest type, 54.
filter for automobiles, 60.
wire gauze filter, 60.
Lubricating apparatus for cylinders, 73.
oils distillated from petroleum, 3.
pump, the Blanke & Raste, 74.
the Deutz, 74.
Lubrication of cylinders, 71.
Lubricator of the Deutz Co., 74.
of the Körting Co., 74.

Magneto-electric ignition, 84.
Maschinenfabrik "Cyklon" cycle engine, 162.
"Maurer-Union" automobile engines, 154.
chassis, gear and carriage body, 188.
Mechanically driven agricultural plants and dairies, 243.
Meissner reversible propeller, 211.
"Mercédès Simplex" chassis, gear and cars, 188.
Mineral oil and its distillates, 1.
tar: its origin, 2.
Mining locomotive, motor-driven, 206, 207.
Mixture governing, 66.
Mixture of alcohol and "ergin," method of making, 17.
of fuel in paraffin and petrol engines, 47.
of paraffin and air, difficulties experienced with, 12.
of petrol and air: rapidity of their formation, 11.
Motor boats of recent construction, 204.
car engines: their history and development, 137.
cars of recent construction, 182.
cycle construction, history and development of, 180.
-driven water- and air-pumps, 225.
omnibus, Daimler, 192.
petrol, specific gravity of, 4.

Naphtha and its distillates, 1.
Neckarsulmer Company's carburettor, 54.
contact-breaker, 86.
cycle engine, 156.
motor tricycle, 198.
sparking-plug, 85.
North American oil-fields, 1.

"Oberursel" engine driven crane, 232.
locomotives, 204.
winding winch, 231.
horizontal engines, details of, 112.
locomobiles, 220.
stationary engines, 109.
vertical engines, details of, 113.
Oil engine development, 27.
fields: their location, 1.
filter, the Blank & Rast, 75.
of turpentine substitute, specific gravity of, 4.
pump of the Swiderski engine, 58.
Oils for lubrication: their characteristics, 71.
Omnibus, Daimler motor-driven, 192.
Omnibuses driven by liquid-fuel engine and dynamo, 210.
One-cylinder, Gardner, paraffin boat engine, 171.
"Maurer-Union" engine, 154.
Origin of liquid fuels, 1.
Otto, N. A., invents four-stroke-cycle compression gas engine, 22.
& Langen engines of 1867, 18.
Overhanging propeller by the Cudell Co., 211.
Ozokerite: its origin, 2.

Paraffin and air, difficulty in forming mixture of, 12.
and crude oil stationary engines, 126.
and petrol engines, component parts of, 41.
construction of, 39.
first built, 18.
working of, 38.
boat engine, Deutz, 170.
Gardner one-cylinder, 171.
Gardner two-cylinder, 172.
Körting, for submarines, 169.
distillated from petroleum, 3.
engine development, 27.
engine-driven installations, 243.

Digitized by Google

Paraffin engines, characteristics of, 27.
ignition, fire risks and regulations, 14.
inflammability of, 13.
oil, calorific value of, 12.
characteristics of, 12.
price of, 12.
precautions for transport and storage of, 14.
stationary engines: conditions ruling their installation in Germany, 250.
two-cylinder, Swiderski, boat engine, 164.
Peat, liquid fuel from, 7.
Peine (Hanover) oil-field, 1.
Pennsylvanian oil-fields, 1.
Petrol-air mixtures, inflammability of, 11.
Petrol and alcohol stationary engines, 92.
and paraffin engines, component parts of, 41.
construction of, 39.
first built, 18.
working of, 38.
Petrol, calorific value of, 10.
characteristics of, 10.
engine-driven installations, 243.
engine, the first, driving a railway vehicle, 24, 201.
engines, ignition, fire risks and regulations, 11.
for automobiles, specific gravity of, 4.
for cleaning, specific gravity of, 4.
for lighting, specific gravity of, 4.
for stationary engines, specific gravity of, 4.
methods of ignition, 11.
price of, 10.
stationary engines: conditions ruling their installation in Germany, 247.
vapours: rapidity of mixture with air, 11.
Petroleum and its distillates, 1.
as fuel, 3.
composition of, 3.
distillates, classification of, 3.
inflammability of, 5.
specific gravity of, 4.
their uses, 4.
ether, specific gravity of, 4.
for medicinal purposes, 3.
Refining Co.'s distillates, 3.
specific gravity of, 3.
Piston of engines: its construction, 43.
ring manufacture, 44.
ring studs, 45.
with fixed gudgeon, 44.
with movable gudgeon, 44.
Pivoting propeller and engine by the Cudell Co., 211.
Plough, engine-driven, the Ganz, 232.
Plug for Bosch high-tension ignition, 88.
Porcelain hot-tube sections, 78.
Portable engines, 220.
Potato spirit as liquid fuel, 7.
Power-driven vehicles, history and development of, 180.
Power production, liquid fuel for, 9.
Precautions to be taken with engines, 254.
Pressure pump for lubrication, the Deutz, 74.
Propeller and engine, pivoting device by the Cudell Co., 211.
blade reversing device, 210.
types for motor boats, 204.
Pump, Diesel engine fuel-, 59.
air-, 129.
Grob valveless oil-, 59.
of the Akroyd paraffin engine, 34.
oil-, of the Swiderski engine, 58.
Pumps, motor-driven, 225.
Putzöl, specific gravity of, 4.

QUALITATIVE regulation of engines, 66.
Quantitative regulation of engines, 66.

RADIATING ribs on cycle engine cylinders, 156.
Radiators for engine cooling, 241.
Rail car built by Daimler in 1887, 201.
vehicles driven by combustion engines, 201.
driven by internal combustion engines, 180.
Railway carriage, Daimler motor-driven, 203.
vehicle driven by a petrol engine, the first, 24, 201.
Retarding ignition for governing, 67.
Reversible propeller, by Grob & Co., 209.
by K. Meissner, 211.
propellers for motor boats, 205.
Reversing of engines by compressed air, 210.
gears for boat engines, 211.
Rhigolene, specific gravity of, 4.
Road vehicles driven by internal combustion engines, 180.
Rock oil and its distillates, 1.
Roll-mill driven by liquid-fuel engine, 246.
Rosins, liquid fuel from, 7.
Roumanian oil-fields, 1.
Running of engines: attendance required, 251.
Russian gunboat, showing Diesel engines, 218.
oil-fields, 1.
Rütgerswerke Co.'s improvements in benzol production, 16.
treatment of benzol, 6.

SAFETY crank for starting, Fischer's, 70.
Sail propeller for motor-boats, 204.
Ship and boat engines: their history and development, 163.
Shunting locomotive, motor-driven, 206, 207.
Simms-Bosch ignition with "Bayard" engine, 151.
Six-cylinder "Hexe" automobile engine, 148.
Hexe" car, chassis of, 187.
Körting submarine engine, 169.
"Sleipner" boat engines, 164.
details of, 167.
Söhnlein stationary engines, 121.
details of, 123.
"Solaröl," obtained from brown coal, 7.
Sparking plugs, 84.
Specific gravity of crude petroleum, 3.

Digitized by Google

Specific gravity of petroleum distillates, 4.
Speed governors for engines, 65.
Spirit, potato, as liquid fuel, 7.
Standardisation of automobile engines, 138.
Starting and reversing engines by compressed air, 210.
crank, Fischer's safety, 70.
devices, 69.
of engines, instructions for the, 251.
Stationary engine carburettor, Körting's, 50.
engines on railways, 138.
engines using paraffin and crude oil, 126.
Longuemare's, 53.
liquid-fuel engines: conditions ruling in Germany, 247.
petrol and alcohol engines, 92.
Steam engines and liquid-fuel engines compared, 180.
Stopping the engine, how to proceed for, 252.
Submarine boat engines using paraffin, 169.
Supply and mixture of fuel, 47.
Swedish oil-heating lamp, 64.
Swiderski engine-driven pumps, 226.
engine oil-pump, 58.
engine on Troost tractor, 201.
four-cylinder automobile engine, 152.
locomobiles, 225.
paraffin engine for heavy cars, 153.
stationary engines, 106.
two-cylinder paraffin boat engine, 164.

TANGYE'S alcohol engine, 120.
engine-driven pumps, 229.
locomobiles, 223.
piston-ring stud, 45.
stationary engines, 118.
Tar distillates, 5.
Terminal eye for cables, the Fischer, 91.
Thornycroft boat engines, 175.
racing boat, 215.
Titusville (Pennsylvania), first tube well at, 2.
Traction engines: their history and development, 137.
Tractor, motor-driven, by Lieut. Troost, 199.
Transmission of liquid-fuel engines, location for, 238.
gears for boat engines, 211.
Transport of heavy parts of engines, 238.
Traverser, engine-driven, by Körting, 235.
Trinkler and Haselwander engines, 27.
Trinkler stationary engine, 134.
Trolley, Daimler, motor-driven, 203.
Troost's motor-driven tractor, 199.
Troubles with engines: their cause and remedies, 254.
Tube-ignition device, the Daimler, 25, 76.
the Funk, 77.
Tube well, the first, 2.
Two-cylinder, Gardner, paraffin boat engine, 172.
Swiderski, paraffin boat engine, 164.

"UNION" automobile engines, 154.
chassis, gear and carriage body, 188.
Uses of petroleum distillates, 4.

VALVE arrangement of engines, 42.
of Trinkler engine, details of, 135.
Valves: their arrangement, 46.
Vaporiser of Deutz stationary engines, 100.
Vehicles driven by liquid-fuel engine and dynamo, 210.
power-driven, history and development of, 180.
Veloyene, specific gravity of, 4.
Verdau Company's piston ring stud, 45.
Vertical engine frame, with cylinder liner, 42.
type, crankshaft above, 40.
crankshaft below, 40.
"Ville de Paris" airship, 219.

WANDERER-Fahrradwerke cycle engine, 161.
motor cycle, 198.
Water- and air-pumps, motor-driven, 225.
cooling of liquid-fuel engines, 240.
Weights of engines for traction purposes, 138.
Well, the first tube, 2.
Winch-driving engines, Kamper, details of, 175.
Winding winch, engine-driven, the "Oberursel," 231.
Wittig & Hees petrol engine, 22.
Wood, liquid fuel from, 7.
-sawing and cutting machine, engine-driven, 236.
Working cylinder of engines, 41.
of paraffin and petrol engines, 38.

ZEPPELIN airship, 219.

LIBRARY OF THE UNIVERSITY OF CALIFORNIA

PRINTED BY NEILL AND CO., LTD., EDINBURGH.

Digitized by Google

THIS BOOK IS DUE ON THE LAST DATE STAMPED BELOW

AN INITIAL FINE OF 25 CENTS

WILL BE ASSESSED FOR FAILURE TO RETURN THIS BOOK ON THE DATE DUE. THE PENALTY WILL INCREASE TO 50 CENTS ON THE FOURTH DAY AND TO $1.00 ON THE SEVENTH DAY OVERDUE.

OCT 31 1933

12Mar'53CR

FEB 26 1953 LU

LD 21-100m-7,'33

Digitized by Google

Lieckfeld
203812
TJ785
L5

Digitized by Google